Government eProcurement System

eProcurement System Government of India

Published Corrigendum Details

Date : 24-Jul-2026 06:43 PM

Print

Organisation Chain :	NHPC Limited||Corporate Office-Faridabad-NHPC||Contract-E and M-CO-NHPC
Tender ID :	2026_NHPC_906114_1
Tender Ref No :	NH/Conts(EnM)-III/Uri-I Stage-II/ENM/2026/01
Tender Title :	Lot-III Electro-mechanical works package of 240 MW (2X120MW) Uri-I Stage-II H.E Project, Baramulla District of UT of J and K
Corrigendum Type :	Technical Bid

Corrigendum Document Details

Corr.No.	Corrigendum Title	Corrigendum Description	Published Date	Document Name	Doc Size(in KB)
1	Corrigendum No. 04	Techno-commercial Amendments and Informative replies	24-Jul-2026 06:42 PM	CORRI4.pdf	16462.39

NHPC LIMITED
(A Govt. of India Navratna Enterprise)
NHPC Office Complex, Sector-33, Faridabad-121003, Haryana (India)
CIN: L40101HR1975GOI032564

Dated: 24.07.2026

Corrigendum No.4 along with Informative Replies

Name of Work: Lot-III: Electro-mechanical works package of 240 MW (2X120MW) Uri-I Stage-II H.E Project, Baramulla District of UT of J&K, India.

Ref: Tender Specification No. NH/Conts(EnM)-III/Uri-I Stage-II/ENM/2026/01

[E-Tender ID: 2026_NHPC_906114_1]

In reference to the subject tender, pursuant to queries received from Prospective Bidders before & after Pre-Bid meeting, **Techno-commercial Amendments** are annexed as 'Commercial_Amendment_01', Technical_D_Amendment_01' and 'Technical_Q_Amendment_01'.

All other terms & conditions and specifications of the Bid Document shall remain unchanged.

For & on behalf of NHPC Limited,

Sd/-

General Manager,
Contracts (E&M)-III,
2nd Floor, Jyoti Sadan, NHPC Office Complex,
Sector-33, Faridabad-121003 (Haryana),
Tele # 0129-2588705
E-mail: nalinikantverma@nhpc.nic.in

Description of Work: Lot-III: Electro-mechanical works package of 240 MW (2X120MW) Uri-I Stage-II H.E Project, Baramulla District of UT of J&K, India

Tender ID.: 2026_ NHPC_906114_1

Commercial_Amendment_01

Sl. No.	Description of referred clause	Referred Clause No.	Existing Clause of Tender Document	Modified provision of Tender Document (modification shown is highlighted and underlined)
	Volume-0-ITB			
1.	Submission of Bids	ITB Cl. No. 1.4.4 (vii)	*Bidders are requested to note that each document to be uploaded for the tender should be less than 2 MB. If any document is more than 2 MB, it can be reduced through zip/ rar and the same can be uploaded. For the file size of less than 1 MB, the transaction uploading time will be very fast.*	Bidders are requested to note that each document to be uploaded for the tender should be less than **40** MB. If any document is more than **40** MB, it can be reduced through zip/ rar and the same can be uploaded. For the file size of less than 1 MB, the transaction uploading time will be very fast.
2.	Commercial Evaluation	ITB Cl. No. 25.3 (d) (ii): **Turbine**	*"The bid of bidder quoting guaranteed weighted average…… .**@INR 8,32,300/- (Rupees Eight Lakh Thirty Two Thousand Three Hundred only)**…….the equalization will be computed on pro-rata basis."*	The text **"** *@INR 8,32,300/- (Rupees Eight Lakh Thirty Two Thousand Three Hundred only)"* appearing in said clause is DELETED and replaced as under: "***@ INR 8,73,900/- (Rupees Eight Lakh Seventy Three Thousand Nine Hundred only)"***
3.	Commercial Evaluation	ITB Cl. No. 25.3 (d) (ii): **Generator**	*"The bid of bidder quoting guaranteed weighted average ……**@INR 21,64,200 /- (Rupees Twenty One Lakh Sixty Four Thousand Two Hundred Only)**…….the equalization will be computed on pro-rata basis."*	The text "*@INR 21,64,200/- (Rupees Twenty One Lakh Sixty Four Thousand Two Hundred Only)"* appearing in said clause is DELETED and replaced as under: "***@ INR 26,09,900/- (Rupees Twenty Six Lakh Nine Thousand Nine Hundred only)."***
	Volume-II A-GCC			
4.	**Commissioning and Operational Acceptance**	**GCC Cl. No. 25**	-	Following Sub-Clause (25.4) is added at the end of Sub-Clause No. 25.3 :

Sl. No.	Description of referred clause	Referred Clause No.	Existing Clause of Tender Document	Modified provision of Tender Document (modification shown is highlighted and underlined)
				25.4 Partial Acceptance **25.4.1 If the Contract specifies that Completion and Commissioning shall be carried out in respect of parts of the Facilities, the provisions relating to Completion and Commissioning including the Guarantee Test shall apply to each such part of the Facilities individually, and the Operational Acceptance Certificate shall be issued accordingly for each such part of the Facilities.** **25.4.2 If a part of the Facilities comprises facilities such as buildings, for which no Commissioning or Guarantee Test is required, then the Engineer In-Charge shall issue the Operational Acceptance Certificate for such facility when it attains Completion, provided that the Contractor shall thereafter complete any outstanding items that are listed in the Operational Acceptance Certificate.**

Sl. No.	Description of referred clause	Referred Clause No.	Existing Clause of Tender Document	Modified provision of Tender Document (modification shown is highlighted and underlined)
5.	**Force Majeure**	**GCC Cl. No.37.1**	"Force Majeure" shall mean any event beyond the reasonable control of the Employer or of the Contractor, as the case may be, and which is unavoidable notwithstanding the reasonable care of the Party affected and shall include, without limitation, the following: (a) war and other hostilities (whether war be declared or not), invasion, act of foreign enemies, mobilisation, requisition or embargo; (b) rebellion, revolution, insurrection, military or usurped power and civil war; (c) ionising radiation or contamination by radio-activity from any nuclear fuel or from any nuclear waste from the combustion of nuclear fuel, radio-active toxic explosives, or other hazardous properties of any explosive nuclear assembly or nuclear components thereof; (d) riot, commotion or disorder including the situation created by Bandhs or strikes called by any political party or outfit, unless solely restricted to the employees of the contractor or of his sub-contractors and arising from the conduct of works. (e) Acts of God such as earthquake (above magnitude of 7 of Richter Scale), any natural calamity as notified by Government of India viz. spread of virus (corona virus in instant case) beyond human control, lightning, unprecedented floods.	"Force Majeure" shall mean any event beyond the reasonable control of the Employer or of the Contractor, as the case may be, and which is unavoidable notwithstanding the reasonable care of the Party affected and shall include, without limitation, the following: **(a) war, hostilities (whether war be declared or not), invasion, act of foreign enemies,** **(b) rebellion, terrorism, revolution, insurrection, military or usurped power, or civil war,** **(c) riot, commotion, disorder, strike or lockout by persons other than the Contractor's Personnel and other employees of the Contractor and Sub- contractors,** **(d) munitions of war, explosive materials, ionising radiation or contamination by radio-activity, except as may be attributable to the Contractor's use of such munitions, explosives, radiation or radio-activity. and** **(e) natural catastrophes such as earthquake, hurricane, typhoon or volcanic activity.** **(f) Spread of pandemic in country where works are being executed**

Sl. No.	Description of referred clause	Referred Clause No.	Existing Clause of Tender Document	Modified provision of Tender Document (modification shown is highlighted and underlined)
6.	**Change in the Facilities**	**GCC Cl. No. 39**	-	Following Sub-Clause (39.3) is added at the end of Sub-Clause No. 39.2 : **39.3 Changes Originating from Contractor** **39.3.1 If the Contractor proposes a Change pursuant to GCC Sub-Clause 39.1.2, the Contractor shall submit to the Engineer In-Charge a written "Application for Change Proposal," giving reasons for the proposed Change and including the information specified in GCC Sub-Clause 39.2.1.** **Upon receipt of the Application for Change Proposal, the Parties shall follow the procedures outlined in GCC Sub-Clauses 39.2.6 and 39.2.7.** **However, should the Employer choose not to proceed, the Contractor shall not be entitled to recover the costs of preparing the Application for Change Proposal.**
7.	**Annex-A of GCC: Valuation of Idling Time Cost Claims**	**1. Site expenses for extended period**	Site expenses = [4% of composite contract (as defined in Clause No. 5.2 of SCC) × authorized time extension for compensation event] / [Contractual Completion Period]	The text "4% of composite contract" is DELETED and replaced with the text **"5% of composite contract"**

Sl. No.	Description of referred clause	Referred Clause No.	Existing Clause of Tender Document	Modified provision of Tender Document (modification shown is highlighted and underlined)
8.	**Annex-A of GCC: Valuation of Idling Time Cost Claims**	**1(e) Other miscellaneous expenditure including establishment**	*The cost under this head is to be limited maximum up to 2% off composite contract price, **within the cap of 4%**, as calculated by the formula as mentioned under Sl. No. (1) above but against documentary evidence only.*	The text "***within the cap of 4%***" is DELETED and replaced with text "**within the cap of 5%**".
9.	**Annex-A of GCC: Valuation of Idling Time Cost Claims**	**Annex-A: Header of Sl. No. 3 :**	3.Bank Guarantee Charges	3. Bank Guarantee **and Insurance (except GCC cl. 34.1 b: Erection All Risk Insurance)** Charges.
10.	**Annex-A of GCC: Valuation of Idling Time Cost Claims**	**4. Charges on account of extension**	The last Para: *Charges towards extended warranty shall be calculated up to **2%** of composite contract price per annum on pro-rata basis.*	The header is replaced as under: **Charges on account of Extension of Warranty** Further,The text **"2%"** is DELETED and replaced with text "**2.25%**"
	Volume-V: Forms & Procedures			
11.	**Appendix 2: Price Adjustment**	**1. B. : (the Header)**	*"For supply of GSU Transformers **(Item no. 8.1 of Price Schedule No. 11)** and Reactors (item no.9.1 of Price Schedule No. 1)"*	The text " *(Item no. 8.1 of Price Schedule No. 11)"* appearing in the header of Sl. No. 1. B, is DELETED and replaced as under : ***" (Item no. 8.1 of Price Schedule No. 1)"***

<table>
<tr><th>Sl. No.</th><th>Description of referred clause</th><th>Referred Clause No.</th><th>Existing Clause of Tender Document</th><th>Modified provision of Tender Document (modification shown is highlighted and underlined)</th></tr>
<tr><td>12.</td><td>Appendix 2. Price Adjustment</td><td>Conditions applicable to Price Adjustment</td><td>
<table>
<tr><th>Item</th><th>Source of Indices Used</th><th>Base year</th></tr>
<tr><td>S_0, S_1</td><td>Office of Economic Advisor, Ministry of Commerce and industry</td><td>2011-2012</td></tr>
<tr><td>C_0, C_1 (WPI)</td><td>Office of Economic Advisor, Ministry of Commerce and industry</td><td>2011-2012</td></tr>
<tr><td>Mo, M_1</td><td>Monthly wholesale Price index for ‘(M)-Manufacture of other Non- metallic Mineral Product’ Bulletin issued by the Office of Economic Adviser, Ministry of Commerce & Industry, New Delhi.</td><td>2011-2012</td></tr>
</table>
</td><td>
<table>
<tr><th>Item</th><th>Source of Indices Used</th><th>Base year</th></tr>
<tr><td>S_0, S_1</td><td>Office of Economic Advisor, Ministry of Commerce and industry</td><td><u>2022-23</u></td></tr>
<tr><td>C_0, C_1 (WPI)</td><td>Office of Economic Advisor, Ministry of Commerce and industry</td><td><u>2022-23</u></td></tr>
<tr><td>Mo, M_1</td><td>Monthly wholesale Price index for ‘(M) Manufacture of other Non- metallic Mineral Product’ Bulletin issued by the Office of Economic Adviser, Ministry of Commerce & Industry, New Delhi.</td><td><u>2022-23</u></td></tr>
</table>
</td></tr>
<tr><td>13.</td><td>Form-5:Bank Guarantee Form for Advance Payment</td><td>Notes: 1. (@)</td><td>This date will be Ninety (90) days beyond the Defects liability period as specified in the Contract.</td><td><u>This date will be ninety (90) days beyond the date of Completion of the Facilities.</u></td></tr>
</table>

Sl. No.	Description of referred clause	Referred Clause No.	Existing Clause of Tender Document	Modified provision of Tender Document (modification shown is highlighted and underlined)
14.	**Form-16: Performance Guarantee Form for Subsidiary Company**	**Form 16 : (the last Para)**	*The Bank also agrees that the Employer at its option shall be entitled to enforce this Guarantee against the Bank as a principal debtor, in the first instance without proceeding against the Contractor/ Parent /holding Company and notwithstanding any security or other guarantee the Employer may have in relation to the Contractor's liabilities.*	**The said last para is DELETED and replaced as under:** **The Bank declares that this Bank Guarantee is issued by the Bank, utilizing the credit limit of M/s …….(name of contractor) and** also agrees that the Employer at its option shall be entitled to enforce this Guarantee against the Bank as a principal debtor, in the first instance without proceeding against the Contractor/ Parent /holding Company and notwithstanding any security or other guarantee the Employer may have in relation to the Contractor's liabilities.
15.	**Form-17: Performance Security Bank Guarantee**	**Form 17 :(the last Para)**	*The Bank also agrees that the Owner at its option shall be entitled to enforce this Guarantee against the Bank as a principal debtor, in the first instance without proceeding against the Manufacturer and notwithstanding any security or other guarantee the Owner may have in relation to the Contractor's liabilities.*	**The said last para is DELETED and replaced as under:** **The Bank declares that this Bank Guarantee is issued by the Bank, utilizing the credit limit of M/s----------(name of manufacturer) and** also agrees that the Employer at its option shall be entitled to enforce this Guarantee against the Bank as a principal debtor, in the first instance without proceeding against the Manufacturer and notwithstanding any security or other guarantee the Employer may have in relation to the Contractor's liabilities.

All other terms & conditions of the bid document shall remain unchanged.

Sd/-

General Manager,

Contracts (E&M)-III,
2nd Floor, Jyoti Sadan, NHPC Office Complex,
Sector-33, Faridabad-121003 (Haryana),
Tele # 0129-2588705
E-mail: nalinikantverma@nhpc.nic.in

Sl. No.	Clause No.	Approved Amendment
A	**General Technical Specification (GTS)**	
i)	Volume IIIA (GTS), Cl no.1.3	The text in Para-3 "three copies in English and one in the original language of any national standards" is replaced with "as and when required, extracts of any national standards"
ii)	Volume IIIA (GTS), Cl no. 8.4	Following line is deleted in Para-3 "The Contractor shall construct storage facilities at site as per clause no 1.11.3 of section 1 (GTR) of Vol 3 B (PTS)"
B	**General Technical Requirement (GTR)**	
i)	Volume IIIB (GTR), Cl no.1.6.3	The text "and other miscellaneous items / works as per clause 1.11" is added in 2nd para, 3rd line after the text "Contract".
ii)	Volume IIIB (GTR), Cl no.1.11.1	The para i.e. " Supply and installation.....allowance." stands replaced by following text : "Supply and installation of (02) MS fabricated Porta Cabin at site. Cabin shall be mounted on a Base frame arrangement made out of structural steel of min depth 200 mm conforming to IS:2062 Gr.A suitably laced by Cross-Members of requisite nos. in order to make it a robust structure for porta cabin. The porta cabins shall be equipped with suitable stiffeners to ensure safety, internal wall panelling, sloped rood, false ceiling, minimum 20 mm thick cemented board flooring with PVC vinyl carpet, weather proof aluminium windows, doors, insulation, concealed wiring-PVC conduits using Fire resistant wires, electric fittings covering : Door lights, LED Tube lights, Bulkhead, Fan, switches & sockets, sockets, AC points with separate MCB, Earthing, lifting hooks etc. Portable cabins should be fitted with 2 T Split AC. As during monsoon heavy rains are expected at site so proper care shall be taken to ensure Zero leakage/ seepage through the roof joints, side wall joints and doors and windows. The Porta cabin shall be painted internally & externally with two coats of Epoxy Primer followed by two coats of Epoxy Paint. The Inside clear dimension (LXWXH) of cabins shall be minimum 20 ft x10 ft x 8 ft with +/- 1” allowance. Porta cabin shall be furnished with overhead storage along the length of cabin, chairs, file cabinets, conference table for 6 persons with chairs, drawers for official meeting etc. Four nos. tables with drawers and chairs shall also be provided in the cabin. The details shall be discussed, finalized and approved during detail engineering."
iii)	Volume IIIB (GTR), Cl no.1.11.4	Sl. No. (ii) is deleted
C	**Particular Technical Specification (PTS)**	
1	**Turbine and Accessories**	
i)	Volume IIIB (PTS), Clause 2.1.1 (6)	The text "(geared type)" is added in 1st line after "monorail hoist"
ii)	Volume IIIB (PTS), Clause 2.4.4	The amount in table at sl. no. A & B i.e. "@INR 33,28,900" is replaced with "@INR 34,95,500"
iii)	Volume IIIB (PTS), Clause 2.5.4.1	The text "750 mm" is replaced with "600 mm" in para 6th.

Sl. No.	Clause No.	Approved Amendment
iv)	Volume IIIB (PTS), Clause 2.5.5.1	The text "Two (2)" is replaced with "One (1)" & "diametrically opposite" is deleted in 2nd para line 1.
v)	Volume IIIB (PTS), Clause 2.5.8.1	The text "Capacitive" at sl. no. 3 (f) in table is replaced with "Magnetostrictive / Guided Wave Radar".
vi)	Volume IIIB (PTS), Clause 2.5.8.1	The text "/ MLDT" at sl. no. 4 (a) in table is added after "LVDT".
2	**Digital Governing System and Accessories**	
i)	Volume IIIB (PTS), Clause 3.5.7.4	The 2nd para is rephrased as below: "The sump tank shall be provided with a manhole of 500 mm diameter with a suitable oil resistant gasket for access to the interior of the tank. A suitable oil level gauge with transmitter for local and SCADA indication shall be provided of magnetostrictive / guided wave radar type. Sight glass gauge shall be provided to indicate the level of the oil in the tank marked with low and high level marks. "
ii)	Volume IIIB (PTS), Cl. No. 3.5.8.2	1. The text "plate steel" in 1st para (1st line) is replaced by text "seamless steel tube / pipe" 2. The text "oil level sight gauges" in 4th Para, 2nd line and "The sight gauges……..at least 50 mm." in 4th Para, 5th line are deleted.
	Volume IIIB (PTS), Cl. No. 3.8	The text "element" is added after "filter" at sl. no. 10 & 11 of table.
4	**Main Inlet Valve and Accessories**	
i)	Volume IIIB (PTS), Clause 4.5.11.4	See sl. no. 2 (i) above
ii)	Volume IIIB (PTS), Cl. No. 4.5.12.2	See sl. no. 2 (ii) above
iii)	Volume IIIB (PTS), Cl. No. 4.8	The text "element" is added after "filter" at sl. no. 4 of table.
5	**Generator**	
i)	Volume IIIB (PTS), Cl no.5.3.1	The text at sl. no. 13 of table, mentioned as "(141.2 MVA) at 0.85 p.f" is replaced by "(120MW) at 0.90 p.f ".
ii)	Volume IIIB (PTS), Cl. No. 5.4.2	In 2nd line after "percent", the text "or as quoted by bidder in TDS (Technical Data Sheet) whichever is higher" is added .
iii)	Volume IIIB (PTS), Cl. No. 5.4.3	The amount in table at sl. no. A & B i.e. "@INR 86,56,500" is replaced with "@104,39,600"
8	**GSU Transformer**	
i)	Volume IIIB (PTS), Cl. No. 8.4.1	Text at Point no (ii) & (iii) of table i.e. "105" & "4" are replaced by "150" & "6" respectively.
ii)	Volume IIIB (PTS), Cl. No. 8.5.8.1	Point (v) is rephrased as: "An electromagnetic water flow meter cum switch for local display and remote monitoring with alarm and one potential free contact shall be installed in the discharge pipe of each heat exchanger."

Sl. No.	Clause No.	Approved Amendment
iii)	Volume IIIB (PTS), Cl. No. 8.5.21.1	Point (xxx) is rephrased as: "Water flow meter cum switch for local display and remote monitoring with alarm contacts (local and remote) and normal flow contacts"
15	**Protection System**	
i)	Volume IIIB (PTS), Cl. No. 15.2.9	The following addditional clause is added as sl. no. ix) "Dismantling of existing PLCC panels from Uri-I PS and installation of the same at Uri-I stage-II along with supply & laying of cable for PLCC from Pothead yard to Uri-I stage-II shall be in the scope of the contractor."
23	**Electric Overhead Travelling (EOT) Cranes**	
i)	Volume IIIB (PTS), Chapter 23	The capacity of GIS EOT crane is revised to 10 T in place of 5 T. The text "5 T" is replaced with "10 T" wherever appears in the chapter for GIS crane.
24	**Cooling Water System**	
i)	Volume IIIB (PTS), Chapter 24	Complete chapter is revised and placed as " Attachment 1_Technical_D_Amendment_01" with amendment
26	**HVAC System**	
i)	Volume IIIB (PTS), Chapter 26	Complete chapter is revised and placed as " Attachment 2_Technical_D_Amendment_01" with amendment
28	**Compressed Air System**	
i)	Volume IIIB (PTS), Cl. No. 28.8	The text "Blow down Air compressor" at point 2 of the table is deleted
D	**Vol-III C (TECHNICAL DATA SHEETS)**	
i)	TDS	Due to minor changes in "chapter nos. 4, 7,8,9,10,11,14,23, 24 & 26" in line with particular technical specification, revised TDS is placed as "Attachment 3_Technical_D_Amendment_01" with the amendment.
E	**Volume IV (Tender Drawings)**	
i)	Volume IV (Main Single Line Diagram)	NH/DEM/URI-I STG-II/SLD/01, NH/DEM/URI-I STG-II/SLD/02, NH/DEM/URI-I STG-II/CW/01, NH/DEM/URI-I STG-II/AC/02, NH/DEM/URI-I STG-II/FF/01 Above drawings are revised and placed as " Attachment 4_Technical_D_Amendment_01" with the amendment.
ii)	Volume IV (General Single Line Diagram for GIS)	
iii)	Volume IV (SLD of Cooling water system)	
iv)	Volume IV (HVAC System Chilled Water for Ventilation	
v)	Volume IV (Fire Fighting System)	
F	**Volume V (Forms & Procedures)**	

Sl. No.	Clause No.	Approved Amendment
i)	Attachment 5A, Item 27.2, PACKAGED AC (WATER COOLED/AIR COOLED)	The item " PACKAGED AC (WATER COOLED/AIR COOLED)" is deleted
ii)	Attachment 5A, Item 27.7, CHILLER	New Item, Chiller along with its vendors name is added and attached.
iii)	Attachment 5B, Item 25.2	The text " PACKAGED AC (WATER COOLED/AIR COOLED)" is replaced with "CHILLER"
iv)	Attachment 5B, Item 9.0 (A)	New Item, "400kV XLPE CABLES" is added as item 9.0(A).
v)	Attachment 5B, Item 20.1 (i) & 20.2 (i)	The text "hydro power station having capacity of 25 MW or above" is replaced with "industrial application" in 3rd line.
vi)	Attachment 5B, Item 20.1 (ii) & 20.2 (ii)	The text "minimum two power stations" is replaced with "two industrial installation" in 3rd line.
vii)	Attachment 5B, Item 20.3 (ii) & 20.4 (ii)	The text "power stations" is replaced with "industrial installation" in 3rd line.
viii)	Attachment 5B Item 20.3 & 20.4	The text "Power plant having capacity of 25 MW or above" is replaced with "industrial application" in 3rd line of Note.
G	Chapter 11-PTS (Vol. III B)	Due to duplication of chapter , page 247 to 265 of uploaded pdf (Page 1 to 640) of PTS (Vol.-III B) may be read as deleted.

---- END ----

24 COOLING WATER SYSTEM

24.1 Scope of Work

Scope of work under this section covers the provision of labour, tools, plants, materials and performance of work necessary for the design, manufacture, quality assurance, quality control, shop assembly, shop testing, delivery at site, site storage and preservation, installation, commissioning, performance testing, acceptance testing, training of Employer's personnel, handing over to Employer and guarantee for two years of cooling water system, as per the specifications hereunder, each complete with all auxiliaries, accessories, spare parts and warranting a trouble free safe operation of the installation.

The scope of work shall be a comprehensive functional system covering all supply and services including but not be limited to following:

24.1.1 Cooling water system equipment

i) Two (2) nos. per unit vertical inline pumps for raw cooling water circuit, along with local control panel, instrumentation and associated accessories etc.

ii) Two (2) nos. per unit vertical inline pumps for secondary closed loop circuit along with local control panel, instrumentation and associated accessories etc.

iii) Two (2) nos. horizontal centrifugal pumps for shaft seal clean water supply circuit along with local control panel, instrumentation

iii) and associated accessories,

iv) Two (2) nos. per unit booster pumps of suitable type, along with local control panel, instrumentation and associated accessories for Bus Reactor.

v) One (1) no. per unit cooling water system for labyrinths cooling during synchronous condenser mode along with booster pumps , filter, isolating valves, NRV, pipes, local control panel, instrumentation and associated accessories,

vi) Two (2) nos. per unit, automatic inline filter complete with automatic purging system, instrumentation, controls and other accessories for primary cooling water circuit and two (2) nos. for reactor circuit,

vii) Two (2) no. per unit automatic self-cleaning discharge filters along with local control panel, instrumentation and associated accessories for Raw/Primary cooling water circuit.

viii) Two (2) nos. per unit automatic self-cleaning filter along with local control panel instrumentation and associated accessories for Closed loop/ Secondary cooling water circuit,

ix) Two (2) no. automatic self-cleaning suction filters with local control panel, instrumentation and associated accessories for shaft seal cooling water circuit

x) Two (2) nos. cyclone separators complete with automatic purging system, instrumentation, controls and other accessories for shaft seal and reactor water supply circuit

xi) Two (2) nos. skid mounted self-flushing candle type filters with local control panel, instrumentation and associated accessories for shaft seal clean water supply circuits (each 100% redundancy)

xii) Two (2) nos. automatic self-cleaning filter along with local control panel instrumentation and associated accessories for make-up water tank supply line,

xiii) One (1) no. per unit automatic self-cleaning filter along with local control panel instrumentation and associated accessories for labyrinths cooling during synchronous condenser mode water circuit,

xiv) One (1) no. per unit wide gap plate type heat exchanger complete with associated accessories for main plant

xv) One (1) no. ultra filtration based water purification system for potable water requirement.

xvi) One (1) no. stainless steel make-up water tank of suitable capacity with necessary pumps, automatic self cleaning filter, with local control panel instrumentation and associated accessories,

xvii) Insulation with vapour proof cladding for exposed pipes, wherever applicable.

xviii) Necessary valves of all types, piping, pressure reducing valve, automatic air vent /release valve, air scouring arrangement, regulating orifice, all type of consumables and other materials.

xix) Electromagnetic water flow meter cum switches permanently installed for local display and remote monitoring

xx) Necessary instrumentation pressure gauges, pressure switches, pressure transmitter, flow indicator, flow relay/ transmitter, and temperature gauges, temperature switches, temperature transmitter etc.

xxi) Necessary pressure indicating devices for Make-up water headers and level sensing/ indicating and remote monitoring devices for Make-up water tank.

xxii) Necessary dismantling tools, chain block / hooks etc. required for handling of pumps & filters etc.

xxiii) Coordination and provision of necessary contacts and/or ports for integration with plant SCADA system.

xxiv) Spare parts in accordance to clause 24.8 “Spare Parts” of this section.

xxv) Tools and instruments in accordance to clause 24.9 “Tools and Instruments” of this section

Any other item(s) not mentioned specifically but necessary for the satisfactory completion of scope of work defined above, as per accepted standard(s) / best international practices.

24.2 Specific Parameters and Layout Conditions

The power station shall have twin loop (primary open and secondary close loop) cooling water circuit.

Schematic diagram of the cooling water system has been outlined as per the diagram no. NH/DEM/Uri-I Stage-II/CW/01

A common cooling water header with necessary isolation valves shall be provided with the provision to meet the cooling water requirement of each unit, Generator Transformer and Bus Reactor header. The header pressure shall be maintained by automatically running, required number of pumps through plant SCADA system.

24.2.1 Cooling water system layout

A) Twin cooling water circuit

The cooling circuit shall comprise of twin cooling water circuit for each generating unit and transformer bank and bus reactors.

The raw water for each unit shall be taken from draft tube by vertical inline pumps having automatic inline strainers at suction side and automatic self cleaning filter & heat exchanger at outlet. Stainless steel gratings shall be installed at inlet suction point and mesh size shall be decided during detail engineering. Pumps along with self cleaning filters and heat exchanger shall be installed at EL 1225.30 M in the pump floor.

Necessary gate valve with motorised valves in series shall be provided in filter suction sides for isolation and auto controls. Necessary valves/motorised valves and instrumentation shown is tentative only and shall be finalised during detailed engineering to fulfil the intended duties and control philosophy. The line shall be capable of meeting the water requirement of two pumps.

The arrangement of cooling water header for Generator Transformer and Bus Reactor and shaft seal has been shown in the ‘Single line diagram of cooling water system’ NH/DEM/Uri-I Stage-II/CW/01.

The tapping for cooling water supply line for use during synchronous condenser mode operation of the unit(s) shall be made from primary cooling water return line.

Secondary (closed loop) water circuit shall be provided with two (2) nos. vertical inline pumps per unit. Water for generator air coolers, bearing oil coolers and transformer oil cooling system and Reactors shall go through a distribution manifold to each cooler and water returns to a collecting manifold.

The primary and secondary system shall be provided with check valves, flow meters, isolation valves and necessary instrumentation.

All cooling water piping shall be provided with adequate automatic air release (preferably at highest location).

In case when no unit is running, cooling of reactor shall be from suitable tapping from HVAC header after filter as shown in the drawing NH/DEM/URI-I STG-II/CW/01. The discharge after reactor cooling in this case shall be done in tail pool of Unit #2.

A common make up water tank of stainless steel with automatic self-cleaning fine filters including necessary valves, instrumentation etc. shall be provided for the secondary cooling water circuit by the contractor. The contractor has to lay necessary pipes for bringing the water up to the makeup water tank. The tapping for make-up water tank shall be taken from HVAC supply line headers / borewell.

B) Shaft seal cooling water circuit

Shaft seal clean water circuit shall comprise of automatic self cleaning filters, pumps, cyclone separators and skid mounted automatic self cleaning fine filters in series. Water supply for the shaft seal clean water system shall be taken from HVAC supply line header.

Necessary gate valve with motorised valves shall be provided in suction sides for isolation and auto control philosophy. Necessary valves/ motorised valves and instrumentation shown is tentative only shall be finalised during detailed engineering to fulfil the intended duties and control philosophy. The layout and scheme shall be as per schematic drawing no. NH/DEM/URI-I STG-II/CW/01.

The shaft seal cooling water pumps, automatic self cleaning filter, skid mounted automatic self flushing fine filters and cyclone separators shall be placed at pump floor EL 1225.30 M.

Adequate arrangement shall be made to discharge sedimentation from all the cyclone separators and automatic filters to the nearest drain with required numbers of check and isolation valves. All common delivery pipes of cooling water system shall necessarily be provided with one gate valve at the outlet so as to enable to close the same under emergency.

Shaft sealing water piping shall be provided with adequate air scouring arrangement.

The tapping for service water from shaft seal system shall also be provided.

Suitable piping both embedded and exposed, fittings, fixtures etc. shall be provided after coordination with the turbine, generator and Transformer and Bus Reactor manufacturers/sub-contractors for cooling water requirement

All cooling water piping including embedded piping shall be provided with adequate air scouring arrangement.

The design shall ensure automatic switching to standby system in case of failure of the unit cooling water system. For this purpose required no. of valves/ motorised valves shall be supplied whether specifically mentioned in the scope of supply or not.

24.2.2 Design considerations

The project is situated in Himalayan region where the silt content during high flow period is excessive and peaks abnormally. Even though material specification have been included and it is not the intention to ask guarantee yet it is mentioned that the underwater components like Cooling water filters, pumps and cyclone separators etc are expected to operate under silt concentration (as per "Enclosure-1") during high flood. The petrographic analysis of silt in water and chemical analysis of water is detailed in "Enclosure-1", General Technical Requirements'.

The Contractor shall critically study the silt data and chemical analysis of water and take the same into account in designing the cooling water system susceptible to abrasive effect of silt, making all such specific provisions and measures including selection of materials, surface coating, corrosion protection/ painting which will help to resist silt erosion/abrasion and enable easy and quick maintenance/replacement of worn out components

The cooling water system shall be suitably designed so that even during synchronous condenser mode operation of generating units, cooling water supply shall be made available continuously to runner, seals, labyrinths etc., and to all required parts of the system. Necessary arrangements shall be provided accordingly.

24.3 Rating and Functional Characteristics

24.3.1 Cooling system

The capacity of the open circuit cooling system shall be designed to meet the requirements of all units.

Twin circuit cooling water system

The major equipment for each unit requiring cooling water are:

i) Generator air coolers,

ii) Generator thrust bearing oil coolers,

iii) Generator guide bearing (upper and lower) oil coolers,

iv) Turbine guide bearing oil coolers,

v) Generator step up transformers

vi) Bus reactor coolers,

vii) Turbine Governor OPUs coolers

viii) Synchronous condenser operation (open loop)

ix) Any other water requirement.

Maximum raw water temperature shall be 27ºC.The design of the cooling water system shall be such that temperature rise for generator air temperatures, bearing oil temperatures, shaft seal temperature and Transformer and Bus Reactor winding / oil temperatures shall not exceed the temperature rises specified in the relevant sections of the "Particular Technical Specifications (PTS)".

Cyclone separators and automatic strainers shall be designed for cold water working pressure rating of at least 7 bars. The valves and instrumentation and regulating orifices shall be selected for at least cold water working pressure rating of PN16. However, the design pressure of the equipment, pipe, fittings etc. shall not be less than the maximum shut of head of selected pumps with suitable margin.

Some of the basic data which are to be adopted for design of the cooling water system, but shall not be limited to, are as follows:

a) Maximum design cooling water temperature rise of 5ºC,

b) Fluid velocity in the pipes normally shall not exceed 4 m/s.

c) Suitable pump heads as per the schematic / layout.

The design capacity of all the above pumps shall have a minimum safety margin of 10% over and above the duty point i.e. desired flow and corresponding head.

24.3.2 Pumps

Two (2) nos. cooling water pumps per unit each for cooling water circuit shall be provided. Each cooling water pumps shall be of hundred percent (100%) capacity to cater the combined cooling water requirement of one complete generating unit including synchronous condenser mode requirement, three single-phase Generator Transformer and Bus Reactor operating at maximum load. Each shaft seal cooling water pump shall also cater to shaft seal requirement of two units.

24.3.3 Automatic Self Cleaning simplex filter

The filters shall be heavy duty preferably wedge wire self cleaning type and shall be suitable for continuous duty to arrest debris, tree leaves, pebbles, coarse sand etc. that may appear in the water. The filter shall be of stainless steel and have seamless cast/carbon steel body with minimum thickness of 10 mm.

One (1) no. automatic drain valve (size not less than 100 mm except in shaft seal) which shall operate on the basis of both i.e. set time and differential pressure shall be provided. In addition to automatic drain valve, an additional valve for manual drain shall also be provided of same size (not less than 100 mm except in shaft seal). Automatic control shall be integral part of the automatic filter. Strainer shall be fitted with swing type bolt and davit arm arrangement for quick opening for easy maintenance. The geared motor arrangement shall be designed for other than the top position. Proven scrapper arrangement for self cleaning with double stainless steel brush shall be provided. Automatic back-flushing arrangement of filters from pump discharge shall also be provided.

Primary cooling circuit discharge line filters & reactor filter shall have filtration capacity to remove 1000 micron & above size of particles and for shaft seal filter (pump suction side) the filtration capacity to remove 500 micron & above and should be automatic self-cleaning. Secondary cooling

water, makeup water delivery and synchronous mode operation line automatic filters shall have filtration capacity of removing particles of size 100 micron and above and should be automatic self-cleaning.

The pressure drop across the filters shall be less than approximately 0.2 bar. Adequate sensing arrangement shall be provided to sense the pressure drop across the filter for further integration with plant SCADA system. Required number of pressure measurement instruments shall also be provided for each filter.

The valves, fittings, other hardwares etc. shall be of stainless steel.

24.3.4 Cyclone separator

The cyclone separators (for shaft seal & reactor circuit) shall be of sufficient capacity to match the capacity of the cooling water pumps.

The contractor shall supply centrifugal type cyclone separators to achieve the cleanliness of water to suit the cooling water requirement of Shaft seal system of two units. The materials of the cyclone separators casing shall be of stainless steel (316 or better). The separators shall be of continuous duty with flanged inlet and outlet for use with filtered raw water pumped from draft tube/tail race. Double pass cyclone separator shall preferably be capable of removing of all material as small as 74-40 microns in cooling water circuit with the efficiency of 98%. The valves, fittings, other hardwares etc. shall be of stainless steel.

The cyclone separator casing shall be designed for minimum schedule 40.

Adequate sensing arrangement shall be provided to sense the pressure drop across the filter for further integration with plant SCADA system.

24.3.5 Skid mounted self-flushing Automatic self-cleaning filter

The automatic self-cleaning filters for shaft seal shall be heavy duty self-cleaning skid mounted type suitable for continuous duty to arrest debris, tree leaves, pebbles, coarse sand etc. that may appear in the water. The filter shall comprise of stainless steel single candle / basket and shall have cast/carbon steel body of seamless pipe with minimum thickness of 10 mm

Skid mounted self-flushing type fine filters of required capacity capable for removal of preferably all material as small as 50 microns or better shall be provided for the shaft seal cooling water requirement. The design shall have proven performance for continuous operation without clogging.

The pressure drop across the filter should be less than approximately 0.2 bar and adequate sensing arrangement shall be provided to sense the pressure drop across the filter for further integration with plant SCADA system. Required number of instruments shall be provided for pressure measurement for each filter. The control philosophy, necessary piping, valves and instrumentation shall be decided to automatic switch over from working to standby filter in case of faults, chocking, running hour etc.

The valves, fittings, other hardwares etc. shall be of stainless steel.

24.3.6 Automatic Inline Filter

Automatic inline filter (or better arrangement and shall be decided during detail engineering) (for primary cooling circuit & reactor circuit) with perforated stainless steel element (stainless steel of 316 or better) shall be provided. One (1) no. automatic drain valve (size not less than 100 mm) which shall operate on the basis of both i.e. set time and differential pressure shall be provided. In addition to automatic drain valve, an additional valve for manual drain shall also be provided of same size (not less than 100 mm). The shell of strainer shall be made from seamless pipe. The pressure drop shall not be more than 0.2 bars. Pressure sensors shall be provided for differential pressure indication across the filters. The filter shall preferably be capable of removal of all material as small as 2000 micron for primary cooling circuit and 1000 micron for reactor circuit . The valves, fittings, other hardwares etc. shall be of stainless steel.

24.3.7 Wide Gap type Heat exchanger

Heat exchanger shall be wide gap plate type capable of transferring all the heat gained during the circulation through the various coolers to raw water. Gap of minimum 10-12 mm in raw waterside and minimum 4-6 mm in secondary water side shall be taken into consideration for designing wide gap plate type heat exchanger.

Material of the plates shall be stainless steel (ASTM A 316 or better) and need to be suitable for prevailing water conditions. The pressure drop across heat exchanger shall not exceed 0.5 bar. The design of heat exchanger shall be based upon the temperature rise mentioned in the PTS clause 24.3.1. The thickness of plate shall be at least 0.8 mm.

The heat exchanger shall be provided with flanged connections for cooling water inlet and outlet on both sides with collapsible/expansion type flexible link at ends. Foundation frame for heat exchanger shall also be provided. Temperature indicators, temperature transmitter, differential pressure switches & gauges shall be provided at the inlet and outlet, at the primary and at the secondary water side of the heat exchanger for visual local and remote indication and alarm.

24.4 Performance Guarantee

The cooling water system along with all auxiliaries and accessories shall be capable of performing intended duties under specified conditions. The Contractor shall guarantee the reliability and performance of the individual equipment as well as of the complete system.

24.5 Design and Construction

24.5.1 Standards

The system and equipment shall be designed, built, tested and installed to the latest revisions of the applicable standards. In the event of other

standards being applicable they will be compared for specific requirement and specifically approved during detailed engineering for the purpose:

24.5.2 Pumps

The cooling water pumps shall be horizontal centrifugal (for shaft seal) / vertical inline type (for main & secondary circuit). The material of the pump impeller and casing shall preferably be of stainless steel (AISI 316 or better) and cast steel (ASTM A 216WCB)/grey cast iron respectively. The selected impeller material shall have excellent abrasion and corrosion resistance properties. The material for shaft, sleeve and key shall be shall be stainless steel (AISI 410 or better). Pump bearings shall be grease lubricated. The pumps shall be complete with continuous duty electric motors with class F insulation (temperature rise limited to class B), control panels, anchor bolts and other mounting materials complying with suitable Indian and International Standards. The motor shall be suitably sized to drive the pump continuously over the specified characteristics without getting overloaded. The pumps shall be suitable for 415V ± 10%, 50Hz ± 5% with contacts for remote operation / indication. The speed of pumps shall not be more than 1450/1500 rpm. Mechanical seals made of tungsten/ silicon cemented carbide material shall be provided for pump.

Electromagnetic type flow switches with suitable nos. of potential free contacts for alarm/ protection shall be provided. Shut-off valves and check valves shall be provided to allow disconnection and switching of each pump without emptying pipes for automation.

Adequate arrangement shall be provided to prevent the pump from rotation in reverse direction.

Motors shall be provided with a top cover/canopy to prevent the ingress of dirt, etc.

24.5.3 Distributing and collecting manifolds

A distributing and collecting manifold shall be provided for each unit. Flow meters with suitable no. of potential free contacts for alarm and protection purpose shall be provided for each cooler according to required parameters, shall be located on the collecting/ distributing manifold.

Suitable back flushing arrangement such as 4-way valve etc. for all coolers shall also be provided.

24.5.4 Make-up water Tanks

The secondary water system shall be provided with a common make-up water tank of suitable capacity. The tank filling circuit shall be provided with automatic self-cleaning filters & pumps including necessary valves etc. and level switch, level gauge and level transducer of radar type for local and remote alarm/ indication. All other required instrumentation, connections etc. as required, shall also be provided. The tank and other hardwares shall be made of stainless steel material. Capacity of make up water tank, pump & filters shall be decided during detail engineering.

24.5.5 Ultra Filtration Based water purification system

The ultra filtration based water purification system shall have minimum capacity of 30 litres/hour to meet the station potable water requirement with storage capacity of min 100 litres. The tapping for potable water shall be taken from shaft seal header or any suitable source as per requirement. All necessary pumps, tanks, pre-treatment plant, ultra filtration membrane, ultra violet unit, storage tank pipe & fittings, instrumentations etc. required to maintain water quality as per IS 10500 shall be in the scope of contractor.

24.5.6 Electro Magnetic water flow switches

Electro Magnetic water flow switches for each outlet from the cooling water pumps shall be provided. All flow switches shall be provided with suitable numbers of independent, adjustable, potential free contacts for low flow alarm and protection purposes.

24.5.7 Electro Magnetic water flow meters cum switches

Electro Magnetic water flow meters cum switches for each distributing manifold shall be provided. All flow meters shall be provided with local as well as remote display and interface for integration to plant SCADA system along with suitable numbers of independent, adjustable, potential free contacts for low flow alarm and protection purposes.

24.5.8 Valves and piping

All embedded and exposed piping shall be of seamless of minimum schedule 80 for raw water cooling water circuit. All embedded and exposed piping shall be of seamless of minimum schedule 80 and schedule 40 for all water cooling water circuit. All gravity drain pipes shall be seamless schedule 40. The piping and valves material shall be in accordance with the clause 5.7 “Piping, Fittings, Valves and Heat Exchangers” of “General Technical Specification (GTS)”.

All required pipes, valves, flanges, fittings, supports, fasteners, and related material shall be supplied as part of this contract. Valve body of all type of valves shall preferably be of cast steel except smaller valves (50 mm and lower) for which the material shall be stainless steel.

Fastener used for supports of pipelines shall be chemically grouted through anchor fasteners and heavy-duty supports shall be provided for the same. Check valves of size 150 mm and above shall be dashpot assisted check valves and size below 150 mm dual plate check valve (silent type) shall be used.

All flanges shall be grooved type with O-ring arrangement.

Automatic air purging valves at suitable location shall be provided for all headers of cooling water system.

Unless otherwise specified, all the equipment (viz. Strainer, cyclone separator & heat exchanger) drain shall have pneumatically operated &

manually operated valve both and the water shall be channelized into nearest drain. The support and hardwares shall be galvanised steel.

24.5.9 Motorised valve

Motorised valve, operated with AC supply, shall be provided at the inlet of cooling water circuit and shaft seal automatic filters etc. as per cooling water system drawing NH/DEM/URI-ISTG-II/CW/01 for automatic operation wherever required. The automatic operation/ switchover of the circuit shall be effected with the chocking / fault of the self-cleaning filters, separators, fine filters, pumps and/or duty cycle etc. or to meet any control and automation philosophy, if required.

Humidity control in the motor shall be provided through suitable enclosure and heaters with thermostat switches. The motorised valve shall also be provided with hand wheel for manual operation and it shall be independent of the motor drive.

24.5.10 Insulation for piping

Wherever applicable, exposed cooling water and shaft seal clean water supply piping shall be insulated against condensation with elastomeric foam based on synthetic rubber (NBR) or approved type insulation/lagging with vapour proof cover. The cover shall be painted in accordance with approved colour code. However, the water piping inside the generator barrel, water pipes over any control panels etc. shall be insulated with elastomeric foam based on synthetic rubber (NBR) with anti-condensation insulation.

24.5.11 Control and monitoring

The cooling water system and associated accessories/equipment shall also be controlled and monitored by the SCADA system. The details of control and monitoring requirement are defined “Section 14 - Computerized Control and Monitoring System” and “Section 15 - Protection System”.

24.5.11.1 Control

The pumps shall be controlled and monitored at three levels:

1) By respective local control cubicles,
2) Local Control Board for common services,
3) Computerized control and monitoring (SCADA) system through Local Control Board for common services.

Facility for selection of control either from Local Control Cubicle or Local Control Board or plant SCADA system shall be provided in the Local Equipment Panel or Local Control Board.

The Contractor shall make provision of contacts and/or ports in local control cubicles for interfacing with SCADA system for control and monitoring.

The Contractor shall provide and install all the sensors and operating devices necessary to fulfil the functional requirement of the specification for control system.

Following local controls, but not limited to, shall be provided for each cooling water pump:

i) Remote / local selector switch,

ii) Start / stop push buttons,

iii) Lamp test push buttons,

iv) Digital Running hour meter.

v) Any other provision required.

Following local controls, but not limited to, shall be provided for each motorised valve:

a) Remote / local selector switch,

b) Open/ close push buttons

c) Lamp test push buttons,

d) Any other provisions required,

Following automatic controls, but not limited to, shall be provided for each cooling water circuit

- Automatic change over from main to standby circuit in case of hydraulic or mechanical faults in pump, self cleaning filter, cyclone separator, fine filters and/or duty cycle etc.
- Running time control with change of sequence to equalise running time,

Provision of necessary contacts/ ports for control, monitoring, supervision and annunciation functions shall be made for duplicating these functions in plant SCADA system.

24.5.11.2 Indication and alarm

The Contractor shall supply suitable instruments and gauges for achieving desired control logic. Indicating instruments as required shall be installed on local control panel and indications may be replicated in Local Control Board/ control room for common services

Following indications, but not limited to, shall be provided for each cooling water pump:

i) Pump running,
ii) Pump stopped,
iii) Water no flow,
iv) Seal heating
v) Moisture indication
vi) Any other indication and alarm required

Following indications, but not limited to, shall be provided for each motorised valve:

a) Valve open
b) Valve opening/ closing,
c) Valve close
d) Motor fault
e) Any other indication and alarm required

24.5.11.3 Protection

The motor for each pumping unit shall be provided with at least the following device:

i) Over load protection,

ii) Under voltage protection,

iii) Single phasing protection,

24.5.11.4 Instrumentation

List of instruments to be furnished with cooling water system is given in Table below. However, the list is indicative only and scope shall be as per approved drawings/bill of materials during detail engineering to achieve the intended duties and control philosophy.

Sl. No.	Parameter	Type of instrument	Quantity
1	Suction pressure of Inline strainer & automatic self cleaning filter	Pressure gauge	One (1) per suction line
2	Suction pressure of Inline strainer & automatic self cleaning filter	Pressure switch	One (1) per suction line
3	Delivery pressure of inline strainer & automatic self cleaning filter	Pressure gauge	One (1) per strainer
4	Differential pressure across inline strainer	Differential Pressure transducer	One (1) per strainer
5	Delivery pressure of cooling water pump	Pressure gauge	One (1) per pump
6	Delivery pressure of cyclone separator	Pressure gauge	One (1) per separator
7	Main cooling water line	Pressure gauge	Four (4) per unit
8	Main cooling water line	Pressure transducer	Four (4) per unit
9	Cooling water flow indication at outlet from each pump header	Electromagnetic type flow meter cum switch	One (1) per outlet from cooling water header
10	Cooling water flow indication at outlet of each cooler	Electromagnetic type flow meter cum switch	One (1) per outlet from cooling water header
11	Cooling water flow indication at pump outlet	Electromagnetic water flow switch	One (1) per outlet of cooling water pump
12	Differential pressure across automatic self-cleaning filters	Differential Pressure transducer	One (1) per filter
13	Shaft seal cooling water pressure	Pressure gauge	One (1) per unit
14	Shaft seal cooling water pressure	Pressure transducer	One (1) per unit
16	Generator Transformer and Bus Reactor cooling water header pressure	Pressure gauge	One (1) per header

Sl. No.	Parameter	Type of instrument	Quantity
17	Generator Transformer and Bus Reactor cooling water header pressure	Pressure transducer	One (1) per header

24.6 Drawings, Documents and Design Calculations

24.6.1 Design memorandum

The Contractor shall submit to Employer a design memorandum prepared in accordance to clause 1.6 “Record and Documentation” of “Section 1- General Technical Requirements.”

24.6.2 Drawings and documents

The Contractor shall submit all the drawings and documents in accordance with requirements stipulated in “Section 2 - Technical Documents” of “General Technical Specification (GTS)”.

24.6.3 Design calculation

The Contractor shall submit the design calculation in accordance to Clause 2.4 of “General Technical Specification (GTS)” covering at least the following, for review / acceptance.

i) Basis of selecting the pump capacity and discharge head,

ii) Basis of size selection of automatic filter, cyclone separators, automatic self cleaning fine filters etc.,

iii) The Contractor shall also provide other calculations as required by the Employer for acceptance of the Contractor’s design.

24.7 Delivery, Installation and Commissioning

The Contractor shall follow the requirements of Delivery, Installation and commissioning elaborated in clause 1.7 “Delivery, Installation and commissioning” of “Section 1 - General Technical Requirements.”

24.8 Spare Parts

Recommended spare parts shall be supplied in accordance to clause 1.8 “Spare Parts” of “Section 1 - General Technical Requirements”. Specified spare parts to be supplied under this section are as follows:

S. No.	Description	Quantity
1.	**Primary Cooling water pump**	
a.	Complete pump with motor	1 nos.
b.	Impeller	2 nos.

S. No.	Description	Quantity
c.	Wear rings set	2 nos.
d.	Pump mechanical seal	2 nos. of each type
e.	Motor bearings	2 nos. of each end
f.	Pump bearings	2 nos. of each end
g.	Set of seal and gasket for pump	2 nos.
2.	Secondary Cooling water pump	
a.	Complete pump with motor	1 nos.
b.	Impeller	2 nos.
c.	Wear rings set	2 nos.
d.	Pump mechanical seal	1 no.
e.	Motor bearings	2 nos.
f.	Pump bearings	2 nos.
g.	Set of seal and gasket for pump	1 no.
3.	Shaft seal Cooling water pump	
a	Complete pump with motor	1 nos.
b	Impeller	2 nos.
c	Wear rings set	2 nos.
d	Pump mechanical seal	1 no.
f	Motor bearings	2 nos.
g	Pump bearings	2 nos.
h	Set of seal and gasket for pump	1 no.
4.	Bus reactor Cooling water pump	
a	Complete pump with motor	1 nos.
b	Impeller	2 nos.
c	Wear rings set	2 nos.
d	Pump mechanical seal	1 no.
f	Motor bearings	2 nos.
g	Pump bearings	2 nos.
h	Set of seal and gasket for pump	1 no.
5.	Synchronous condenser mode Cooling water pump	
a	Complete pump with motor	1 nos.
b	Impeller	2 nos.

S. No.	Description	Quantity
c	Wear rings set	2 nos.
d	Pump mechanical seal	1 no.
f	Motor bearings	2 nos.
g	Pump bearings	2 nos.
h	Set of seal and gasket for pump	1 no.
6.	Heat exchanger	1 no.
7.	Strainer/Filter element in Primary cooling water system, Secondary cooling water system, synchronous mode, bus reactor & make-up water system	2 nos. each type
8.	Automatic self-cleaning & Skid mounted filter for Shaft seal circuit	
a.	Set of complete wedge wire filter element assembly consisting of multiple candles, as per design	2 nos.
b.	Filtration Media set for shaft seal	2 nos.
c.	Motor	2 nos. of each type and size
d.	Set of seal and gasket	2 nos. of each type and size
9.	Cyclone separator	
a.	Purging valve	2 nos. of each type and size
b.	Solenoid valve	2 nos. of each type
10.	Inline Filter	2 nos. of each type and size
11.	Valves (gate type, butterfly type, needle type, globe type, non- return valve, check valve)	2 nos. of each type
12.	Pressure gauges and pressure switches	4 nos. of each type
13.	Flow meters and flow switches	4 nos. of each type & size
14.	Temperature gauges and temperature transmitter	10 nos. of each type & size
15.	Motorised valves of each type along with motor/ panel and other accessories	4 nos. of each type & size

S. No.	Description	Quantity
16.	Automatic air release valve	4 nos. of each type & size

24.9 Tools and Instruments

The Contractor shall supply all necessary tools and instruments etc. for installation, repair and maintenance in accordance to clause 1.9 “Tools and Instruments” of “Section 1 - General Technical Requirements”.

24.9.1 Special tools

The Contractor shall list and supply all special tools. List of such tools including their make and detailed specification, shall be submitted for acceptance by the Employer.

24.10 Quality Assurance and Testing

The Contractor shall follow the quality assurance and testing requirements specified separately in “Quality assurance and Testing Specifications (QTS)”.

26 HEATING, VENTILATION AND AIR CONDITIONING SYSTEM (HVAC)

26.1 Scope of Work

Scope of work under this section covers the provision of labour, tools, plants, materials and performance of work necessary for the design, manufacture, quality assurance, quality control, shop assembly, shop testing, delivery at site, site storage and preservation, installation, commissioning, performance testing, acceptance testing, training of Employer's personnel, handing over to Employer and guarantee for two years of heating, ventilation and air conditioning system (HVAC) system, as per the specifications hereunder, each complete with all auxiliaries, accessories, spare parts and warranting a trouble free safe operation of the installation.

The scope of work shall be a comprehensive functional system complete in every respect including but not be limited to following:

26.1.1 AIR Handling Units (AHUs) /Supply Fans/ Blowers

i) Two (2) sets of Fresh air blowers of 100% capacity each (one unit serves as standby) including filters, enclosures etc. for supply of fresh air to the entire system, to be located at the Ventilation tunnel portal.

ii) Two (2) sets of Fresh Air AHUs, each of them of 100 % of the required capacity (one unit serves as standby) for the area designated in power house floors, control block, service bay, main access tunnel and bus duct gallery and Two (2) sets of fresh air AHUs, each of them of 100 % of the required capacity (one unit serves as standby) Transformer Cavern, GIS, escape gallery, connecting gallery and cable tunnel etc..

iii) Required numbers of Air handling units (vertical mounted) for various power house floors, Control Block floors, bus duct galleries and transformer area, GIS area etc. to maintain the requisite air flow, temperature, humidity, comfort etc.

iv) Required nos. of supply air fan for cable tunnel in transformer cavern

v) Boosters/ blowers/ AHU's/ Fan etc. required to ensure a well ventilated/ air conditioned system in the power house to maintain a positive draft under all circumstances of operation.

vi) Required number of duct mounted heaters to maintain required temperature in winter.

26.1.2 Exhaust air fans

i) Required nos. of exhaust air fans for exhaust of air from the battery rooms etc. in powerhouse and DG building with 100% standby capacity.

ii) Required nos. of exhaust air fans for exhaust of air through exhaust duct from the toilets, kitchen, first aid room, locker rooms, mechanical workshop etc. at different floors in powerhouse and from the toilets etc. in GIS/DG building, each of 100% of required capacity.

iii) Required nos. of smoke exhaust air fans / blowers for exhaust of smoke/ air through exhaust duct from all ventilated areas including powerhouse floors, control block, service bay, Transformer cum GIS cavern, galleries, bus duct, store, kitchen etc. with 100% stand by capacity.

iv) Required nos. of exhaust air fans / blowers for Transformer / GIS room each of 100% of standby capacity.

v) Required nos. of exhaust air fans / blowers for exhaust of air from the Powerhouse with 100% stand by capacity.

vi) Two (2) nos. of exhaust air fans for 11KV room at DG room area each of 100% capacity.

vii) Required nos. of exhaust air fans / blower for exhaust of air/smoke from Main Access tunnel, DT gate operating cavern, adit to power house top area connecting tunnel, adit to transformer cavern top connecting tunnel, E&M stores outside the power house, Adit to pressure shaft lower gallery, escape gallery, connecting gallery, Cable tunnel & Ventilation tunnel with 100% stand by capacity.

26.1.3 Chillers and Circulating Pumps

i) Two (2) nos. water-cooled chillers (WCC) units each with 100% of required cooling capacity (one unit serves as standby).

ii) Two (2) nos. Circulation pumps for chilled water circuit system, each with 100% of required capacity (one pump serves as standby).

iii) One (2) nos. automatic self cleaning filters along with instrumentation and associated accessories for chilled water circulation circuit.

26.1.4 Air conditioning units (ACUs)

i) Three (3) sets of air-conditioner units (ACU), each of them of 50 % of the required capacity (one unit serves as standby) for Control room, conference room, offices, library, lobby, adjacent rooms, telecom area etc. for air conditioning circuits.

ii) Three (3) nos. of air conditioners (all weather split package type) each of them of 50 % of the required capacity (one unit serves as standby) for DG building office, relay/ panel room, PLCC room areas etc.

26.1.5 Cooling water pumps, Automatic self-cleaning filters

i) Two (2) nos. of raw water pumps for primary cooling water circuit along with local control panel, instrumentation and associated accessories etc. each with 100% of required capacity.

ii) Two (2) nos. pumps for secondary closed loop circuit along with local control panel, instrumentation and associated accessories etc., each with 100% of required capacity.

iii) Two (2) nos. per unit, automatic inline filter complete with automatic purging system, instrumentation, controls and other accessories for primary cooling water circuit,

iv) Two (2) nos. of raw water automatic self cleaning simplex wedge wire filters, along with local control panel, instrumentation and associated accessories for primary cooling water circuit.

v) Two (2) nos. of automatic self cleaning wedge wire simplex filters, along with local control panel, instrumentation and associated accessories for secondary cooling water circuit.

vi) One (1) no. wide gap plate type heat exchanger complete with associated accessories.

26.1.6 Auxiliary system and miscellaneous items

i) Air duct distribution system for supply and return air of all HVAC systems, with necessary galvanized sheet metal ducts (for battery room exhaust air system, special rust, acid and corrosion proof ducts etc.), elbows, tees, supports, fixations, including all necessary grills, louvers, outside air louvers, adjusting duct dampers, motorized air dampers, heating and cooling insulations, etc.

ii) Central computerised control panel for HVAC system complete with all wiring, instrumentation and associated accessories etc.

iii) Any additional AHUs, pumps, ACUs, chillers, fans, FCUs and other items/ equipment felt necessary during detailed engineering.

iv) Local control panels for air handling units / ACU, water cooled chiller units , circulation/ cooling water pumps, automatic filters, supply fans, exhaust fans, FCUs etc.

v) Insulation with vapour proof cladding for exposed pipes, wherever applicable.

vi) Makeup water tank of stainless steel of suitable capacity for chilled water circuit along with necessary interconnected piping, valves, filters and pumps for bringing the potable water from makeup water tank.

vii) Chilled / Cooling water distribution system along with necessary insulation, valves, fittings, piping, filters, regulating orifices, all type of consumables and other materials.

viii) Necessary instrumentation including pressure gauges, pressure switches, temperature gauges, temperature switches, flows indicator, flow relay/transmitter and humidity sensing devices/instruments etc.

ix) Provision of necessary contacts and/or ports for integration with plant SCADA system and fire fighting system.

x) Spare parts in accordance to clause 26.8 “Spare Parts” of this section.

xi) Tools and instruments in accordance to clause 26.9 "Tools and Instruments" of this section

Any other item(s) not mentioned specifically but necessary for the satisfactory completion of scope of work defined above, as per accepted standard(s) / best international practices.

26.2 Specific Parameters and Layout Conditions

26.2.1 Layout and General Arrangement

Existing air intake tunnel of Uri Power Station shall be used for fresh air intake after suitable augmentation/modification in existing main air intake fans/system / any other arrangement. The existing capacity of Uri-I PS fresh air blower is 35.42 m^3/s. Contractor shall design and supply the system considering the existing capacity & additional requirement for Uri-I stage-II. Normal exhausts of powerhouse area/transformer area shall be routed through MAT and smoke/battery exhaust etc. shall be done through adit to powerhouse top. However, final duct routing shall be decided during detail engineering.

The Power House building, Control Block, Transformer cum GIS Cavern shall be divided into following areas for heating, ventilation and air conditioning as indicated in HVAC flow diagram no. NH/DEM/URI-I STG-II/AC/01.The brief description of each area and location of HVAC equipment is tentative only and shall be finalized during detailed engineering. The location described is as below:

Equipment	Location	Catered area
Fresh air blowers	Ventilation tunnel portal	Fresh air for all areas i.e. power house, control block, Transformer cavern, bus duct galleries, cable tunnel, escape gallery etc.
Fresh Air AHUs	As per site suitability	Power house floors, control block, bus duct galleries, drainage gallery, service bay, main access tunnel Transformer cavern, escape gallery and , cable tunnel etc.
Vertically Mounted Air Handling Units	Power House Floors	Various Power house Floors, Bus Duct, Service Bay,
Vertically Mounted Air Handling Units	Transformer cum GIS cavern	GIS Floor, GIB area & transformer cavern
ACUs	As per site suitability	Control room, offices, record room, library, conference room training hall, model cum visitor's room, telecom area, lift lobby and passage etc.
All weather package type Split	DG Building at Pothead yard	DG Control room, Office area, PLCC Room, Relay/Panel rooms

Equipment	Location	Catered area
ACs		etc.
Water cooled Chillers	Power House Control block	Entire Area

26.2.2 Cooling water circuit

The cooling water for the raw water circuit shall be drawn from the tail race of Unit-1 & 2. The primary cooling water circuit shall be provided with pumps, automatic filters, plate type heat exchanger and necessary valves & instrumentation (NH/DEM/URI-I STG-II/AC/02). Stainless steel gratings shall be installed and mesh size shall be decided during detail engineering. The water after passing through cooling coils shall be discharged to tail pool. The contractor has to lay all necessary pipes, valves, instrumentation etc. to make the system complete. The capacity of HVAC headers & pipes shall be designed to cater the water requirement of HVAC system, shaft seal & makeup water tank simultaneously without interfering the performance of each other.

The source of secondary cooling water circuit shall be the common makeup tank of cooling water circuit. Secondary (closed loop) water circuit shall be provided with two (2) nos. centrifugal pumps, check valves, flow meters, isolation valves, and automatic self cleaning filters.

The primary and secondary system shall be provided with check valves, flow meters, isolation valves and necessary instrumentation, which shall be finalised during detailed engineering to fulfil the intended duties and control philosophy. Necessary gate valve with motorised valves in series shall be provided in filter suction side for isolation and auto controls.

The source of chilled water circuit shall be the separate makeup water tank with automatic filling valve in the filling line, which shall be filled from potable water source.

26.2.3 Design considerations

The project is situated in Himalayan region where the silt content during high flow period is excessive and peaks abnormally. Even though material specification have been included and it is not the intention to ask guarantee yet it is mentioned that the underwater components like raw water filters and pumps etc. are expected to operate under silt concentration (detailed as per Enclosure-1) during high flood. The petrographic analysis of silt in water and chemical analysis of water is detailed in (clause 1.5.1.2) of Section-1, General Technical Requirements'.

The Contractor shall critically study the silt data and chemical analysis of water and take the same into account in designing the HVAC system susceptible to abrasive effect of silt, making all such specific provisions and measures including selection of materials, surface coating, corrosion protection/ painting which will help to resist silt erosion/abrasion and enable easy and quick maintenance/replacement of worn out components.

26.2.4 Fire safety

The Contractor shall coordinate with the fire fighting system Contractor for designing the ventilation and air conditioning system providing necessary means and pressure to stop the supply of air to the affected area and to evacuate smoke and toxic particles from the place of origin to the outdoors in a manner that it does not interfere with the operation of plant and to allow for emergency access and egress. In addition to above, manual option for activation of exhaust/smoke evacuation shall also be provided.

26.3 Rating and Functional Characteristics

The system design shall be based on but not limited to criteria, factors, and details outlined subsequently.

26.3.1 Design condition

The maximum and minimum ambient temperature and relative humidity for the design of the HVAC system in summer and winter shall tentatively considered as follows:

Summer	-	40° C & 99.27% max. RH
Winter	-	-5° C & 20 % min. RH

The maximum and minimum river water temperatures during the year shall tentatively be considered as 30° C and 3.0°C respectively.

26.3.2 Indoor air conditions

All air conditioned areas catered by air conditioning units shall be maintained at a temperature of 24°C ±1°C and at a relative humidity of not more than 55%.

Other areas of Power House, Control Block shall be catered by air handling units, vertically mounted AHUs and fresh air units in the Powerhouse, service bay, drainage gallery, bus duct galleries as well as control block floors, transformer cavern, GIB area and GIS Cavern shall be maintained at temperatures between 20°C - 30°C at a relative humidity not exceeding 65%.

DG building control room / office / relay / panel room etc shall be maintained at a temperature of 24 ± 1°C and at a relative humidity not exceeding 55% by all-weather package type split AC.

The HVAC systems shall be designed and erected to guarantee the room conditions according to the design requirements. The internal heat production from electrical and mechanical equipment shall be calculated by the Contractor. Final calculation shall depend on the design data of individual manufacturer's equipment.

26.3.3 Air changes per hour

All ventilated and air conditioned areas shall be designed to maintain a positive pressure within the powerhouse with at least one fresh air change

per hour in tunnel area. Air changes in the other areas shall be in accordance to IS 4720.

26.3.4 Noise levels

The noise level when measured at (one) 1 m from source, caused by operation of the HVAC systems shall not exceed:

i) 45 dB (A) in rooms as in the control rooms, offices, conference rooms, record room, library and reception room and 60dB (A) in other areas,

ii) 70 dB (A) for all diffusers grills and 85 dB (A) for motors, fans, etc,

iii) Silencer, as required, shall be provided to guarantee the above sound levels.

26.3.5 Air velocities in ducts

In main ducts	370-670 m/min
In branch ducts	250-550 m/min
In occupied room zones	120 m/min

26.4 Performance Guarantee

The heating, Ventilation and air conditioning system along with all auxiliaries and accessories shall be capable of performing intended duties under specified conditions. The Contractor shall guarantee the reliability and performance of the individual equipment as well as of complete system.

26.5 Design and Construction

26.5.1 Standards

The system and equipment shall be designed, built, tested and installed to the latest revisions of the following applicable standards. In the event of other standards being applicable they will be compared for specific requirement and specifically approved during detailed engineering for the purpose:

Sl.No.	Standard	Description
1	-	ASHRAE Handbook, data and guidebook
2	IS 4720	Code for practice for ventilation of surface hydel power stations
3	IS 3103	Code of practice for industrial ventilation
4	ANSI/ ASHRAE Standard 62	Ventilation for acceptable indoor air quality
5	IS 655	Specification for metal air duct

6	IS 277	Galvanized steel sheets specification
7	IS 8148	Packaged air conditioners

26.5.2 Air handling units/ACUs

26.5.2.1 General Description

Unit shall be central station air handler. It shall consist of a fan with the following factory-installed components as indicated on the equipment schedule, as per applicability:

1) Cooling coil section with water coils and heating coil section
2) Access and plenum section
3) Filter section
4) Mixing box section:
5) Face and bypass damper sections for:
   a) Multi zone damper section.
   b) Air mixer section.
   c) Return fan section.
   d) Exhaust section.

Units shall ship in the number of sections necessary to meet project requirements. All sections shall be flanged and gasketed to allow easy assembly and disassembly. In case, heating and cooling cannot be met from one unit, separate coils shall be provided for each duty.

The quantity of vertically mounted AHUs shall be decided during detail engineering to maintain the air flow, temperature, humidity, etc.

26.5.2.2 Casing

A) Construction

The AHUs shall be double skinned with min. 1 mm thickness precoated, free floor mounted type, constructed as a stable compact galvanized steel casing, factory assembled , divided in several cubicles for easier installation

i) Casing panels shall be removable for easy access to unit. All panels shall be gasketed to ensure a tight seal.

ii) The construction of the AHU shall allow for easy maintenance/replacement of faulty components without dismantling the whole assembly

iii) Access sections shall have a double-wall hinged access door on both sides of component.

B) Insulation

Each section shall be factory insulated. Insulation shall have full coverage waterproof adhesive to firmly secure the material to the unit casing. Insulation shall meet the erosion requirements of UL 181. Insulation and

insulation adhesive shall comply with NFPA 90A requirements for flame spread and smoke generation.

C) Drain Pans

Drain pans shall be constructed of insulated double wall stainless steel of min. 16G thickness. The pan shall be sloped toward the drain fitting.

26.5.2.3 Fans

Backward-curved fans shall have one double width double inlet (DWDI) fan wheel and scroll. They shall be constructed of heavy gauge galvanized steel. They shall be designed for continuous operation at the maximum rated fan speed and motor horsepower.

Airfoil fan sections shall have one DWDI airfoil fan wheel and scroll. Airfoil blades shall be double thickness design. They shall be painted with zinc chromate primer and enamel paint.

Plenum fan sections shall have one single width single inlet (SWSI) airfoil fan wheel. Airfoil blades shall be double thickness design. Wheels shall be painted with zinc chromate primer and enamel paint. They shall be designed for continuous operation at the maximum rated fan speed and motor horsepower.

All fans bearings shall have a minimum life of 40,000 hours. Fan shafts shall be solid steel, turned, ground, polished and coated with rust preventative oil. All fan motors shall have minimum service factor of 1.15.

26.5.2.4 Filter sections

Flat filter sections shall accept 25, 50,100 MM (1-in,2-in.,or 4-in.) width filters in any combination that totals 25, 50, 75,100MM (1, 2,3 or 4 inches).

26.5.2.5 Dampers

Mixing boxes, filter-mixing boxes, and exhaust boxes shall have parallel blades and interconnecting motorised outside-air supply air and return-air dampers with manual volume control mechanism.. Damper blades shall be constructed of galvanized steel with a double-skin airfoil design.

The blades shall be minimum 1.6 mm thick and the frame shall be minimum 2 mm thickness.

26.5.2.6 Air mixer

Air mixer shall be constructed of welded aluminium framing and turbulators. The mixer shall have no moving parts. It shall contain a primary set of direction-changing vanes, a secondary set of turbulator vanes, and a cone design for mixing of air streams.

26.5.2.7 Coils

A) General Fabrication:

a) All water cooling coils shall have 12.5 mm OD seamless copper tubes mechanically expanded into fins to ensure high thermal performance

with lower total flow and pumping requirements. Minimum tube wall thickness shall be at least 0.6mm.

b) Copper plate fin type with belled collars. Copper-finned coils shall be supplied with stainless steel casing, tube sheets and other hardwares.

26.5.2.8 Water Cooling Coils:

Headers shall be non-ferrous with steel MPT connections.

26.5.2.9 Duct mounted Electric Heater box:

Duct mounted Electric heater shall be constructed of pre painted galvanized steel and shall provide mounting of the heater box with proper insulation from metallic parts.

The manufacturer shall furnish integral control box. It shall contain thermal cut-outs, primary and secondary control, sub-circuit fusing, airflow switch, and fused control transformer.

26.5.2.10 Humidifier

AHUs / ACUs shall be provided with Humidifier, Pan Type steam boiler (if required), to raise and maintain specified level of indoor Relative Humidity (RH). The Humidifier will consist of insulted Pan, electric heater, water connection and wiring.

Accessories will include float switch for low water level cut-out, float valve with stainless steel ball, thermostat, sight glass and humidistat for sensing/controlling humidity.

It will be duly factory wired (control as well as power) with copper bus bar connection and terminal box. The pan will be thermally insulated. In addition to providing heating element of required rating, as specified, the humidifier will be provided with 0.5 KW heater with thermostat to maintain water temperature.

26.5.3 Blowers/boosters

Blowers/boosters shall consist of fans, casings, air filters and dampers with enclosures. The fans, casings, air filters and dampers shall be as per relevant sub –clauses of Air handling unit of this section.

26.5.4 Water cooled Chiller Unit

The water cooled liquid chiller will consist of accessible, hermetic direct driven centrifugal compressor with independent circuits evaporator, condenser, microprocessor based control and a unit-mounted motor starter, refrigerant charged, factory run-tested and ready for operation. All the necessary piping, valves, fittings and other hardwares shall be of stainless steel.

26.5.4.1 Compressor

The compressor will be centrifugal type of proven design for use with ozone friendly refrigerant (R-134a) or better. The specification shall be subject to Employer's approval.

The design of the compressor should ensure vibration-free operation over a wide range of operating conditions and high energy-efficiency. The capacity controlling device shall be arranged for unloaded start. Power consumption shall proportionately reduce with the stepping down of compressor capacity to as low as 25% of full load in direct response to refrigeration load changes.

26.5.4.2 Compressor Motor Assembly

The compressor will have accessible hermetic/semi-hermetic direct driven motor, as per manufacturer's design speed, working on 415V ± 10%, 3 phase, 50 Hz ± 5%, power supply. The motor will be squirrel-cage two pole induction type and will be suction-gas-cooled. Due consideration will be given while deciding the protection devices to take care of probable voltage fluctuations prevailing at site.

Rolling element-bearing groups will be provided at each end of both rotors, separately housed, and pressure lubricated. The system will be provided with oil separator and filtration devices

26.5.4.3 Condenser

The water-cooled condenser shall be of shell and tube type with carbon steel shell and integrally finned copper tubes. Water-cooled condenser coil shall be leak tested at 2 times of design pressure.

26.5.4.4 Chiller (Cooler)

Chillers shall be direct-expansion/ flooded type comprising mild steel shell, integrally finned copper tubes rolled into tube sheets cast iron water headers, liquid line connection, suction header, drain plug and purge valves. Shell and tube type chillers shall have the following components:

A) Shell and Water Boxes

The chiller shell shall be formed of carbon steel, provided with cast iron water boxes having standard flange type connections suitable for 10KG. Per sq. cm (150 psig) working pressure. Water boxes shall be provided with drain connections and shall be easily openable for tube cleaning. Suitable tapping shall be provided in the water boxes/ water lines for temperature control bulb and gages.

B) Tubes

12.5 to 19 mm diameter seamless copper tubing shall be used for evaporator surface. Each tube shall be individually replaceable.

C) Insulation

The chiller shell shall be covered with expanded polystyrene in multiple layer of thermal insulation with vapour barrier as per the section "Insulation". Suction line of refrigerant circuit piping shall also be provided with thermal insulation.

26.5.4.5 Refrigerant piping and components

The refrigeration piping shall be complete with externally equalised thermostatic expansion valve, liquid line strainer, dehydrator and liquid line shut-off valve.

Refrigerant piping and fittings shall be all copper and valves shall be brass/ gunmetal construction.

The piping shall be designed for an internal pressure representing the most severe condition of coincident pressure and temperature expected in normal operation including fluid head.

The test pressure for piping shall be 2.0 times the design pressure.

The water cooled chiller shall be factory piped with adequate charge of refrigerant and oil.

26.5.5 Split type Air Conditioners

The air conditioner units shall be provided as independent and standard package. It shall include the noise absorption element inside. Each unit shall consist of condenser and compressor in one section and another section comprise of fan, cooling and heating coils/sections. The condenser and compressor section shall be located at the roof top of DG building or any other suitable location.

26.5.6 Controls

A) Unit Control Module

The unit shall be provided with microprocessor control system for air - cooled packaged air conditioner unit with latest technology. Controls shall be interfaced with plant SCADA. Necessary hardwares, cables etc shall be in the scope of contractor.

It shall have control logic with the Clear Language Display, which will have various functions that allow the operator to read unit information and adjust set points.

B) Unit Control Module (UCM) Features

1) Equal Compressor Sequencing - The control system shall maximize both compressor and motor life by equalizing the number of starts and the operating hours. The UCM will start the compressor with the least number of starts and turn off the compressor with the most operating hours, equalizing starts and running hours. This will provide equal compressor wear to various units.

2) Chiller Flow Protection - The in-built protection will automatically detect a no water flow condition.

3) Chiller System Logging:-The UCM will display data required to log the chiller system. The following information will be available as standard feature with the water-cooled centrifugal chiller Microprocessor:

   i) Entering and leaving chilled water temperatures,

   ii) Ambient air temperature,

   iii) Evaporator and condenser refrigerant temperatures and pressures,

   iv) Percent RLA for each compressor,

   v) Percent line voltage,

vi) Compressor starts and running hours,

vii) Active set points:

a) Chilled water set point

b) Current limit set point

c) Low ambient lockout set point

viii) Other desired diagnostic and operating conditions

ix) Part failure diagnostics:

a) Water temperature sensors

b) Refrigerant temperature sensor

c) Compressor contactors

x) Interface to the Station SCADA system

The system should have provisions and facility for interfacing the chiller with plant SCADA System:

C) Chiller inputs will include:

i) Chiller enable/ disable

ii) Circuit enable/ disable

iii) Chilled water set point

iv) Current limit set point

D) Chiller outputs will include:

i) Compressor running indication

ii) Alarm indication (for each circuit)

iii) Maximum capacity

E) Cooling/Chilled water pumps will include:

i) Remote/local selector switch,

ii) Start/stop push buttons

iii) Pump operation sequencing for equal running hours of pumps and change over in case of electrical/hydraulic fault.

F) Cooling/Chilled water pumps will include:

i) Remote/local selector switch,

ii) Start/stop push buttons

iii) Pump operation sequencing for equal running hours of pumps and change over in case of electrical/hydraulic fault.

26.5.7 Piping and Valves

The necessary piping and valves installation for:

i) Cooling water circuit to all cooling coils of AHU, ACUs and FCU

ii) Condense water discharge from all above-mentioned air coolers shall be included in the supply. The supply shall also include the necessary fittings, valves (manually and motor operated valves, return valves etc.), flow control meters, pressure gauges, thermostats, insulations and fixations. All embedded and exposed piping shall be of seamless of minimum schedule 80. All gravity drain pipes shall be seamless schedule 40.

iii) The piping and valves material shall be in accordance with clause no. 5.7 “Piping, fittings, valves and Heat exchangers” of “General Technical Specification (GTS)”. Valve body of all type of valves shall preferable be of cast steel except smaller valves (50 mm and lower) for which the material shall be stainless steel.

iv) Valve size above DN200 shall also be provided with manual gear drive arrangement for ease of operation. Fastener used for supports of pipelines shall be chemically grouted through anchor fasteners and heavy-duty supports shall be provided for the same. Check valves of size 150 mm and above shall be dashpot assisted check valves and size below 150 mm dual plate check valve (silent type) shall be used.

v) All flanges shall be grooved type with O ring arrangement.

vi) Unless otherwise specified, all the equipment (viz. strainer, heat exchanger etc.) drain shall have pneumatically operated & manually operated valve both and the water shall be channelized into nearest drain.

The supports and hardwares shall be galvanised steel.

26.5.8 Cooling water system

26.5.8.1 Cooling and Chilled water pump

The cooling water pumps shall be horizontal centrifugal type. The material of the pump impeller shall preferably be stainless steel (AISI 316 or better). The selected impeller material shall have excellent abrasion and corrosion resistant properties. Shaft and casing material shall be stainless steel (AISI 410 or better) and (ASTM A 216WCB)/grey cast iron respectively. The pumps shall be complete with continuous duty electric motors with class F insulation (temperature rise limited to class B), control panels, cables, anchor bolts and other mounting materials complying with suitable Indian and International Standards. The motor shall be suitably sized to drive the pump continuously over the specified characteristics without getting overloaded. The pumps shall be suitable for 415V ± 10%, 50Hz ± 5% with contacts for remote operation / indication. The speed of pumps shall preferably be not more than 1450/1500 rpm. Shut-off valves and check valves shall be provided to allow disconnection and switching of each pump without emptying pipes.

The design capacity of the pumps shall have a minimum safety margin of 10% over and above the duty point i.e. desired flow and corresponding head.

26.5.8.2 Automatic Inline Filter

Automatic inline filter (or better arrangement and shall be decided during detail engineering) with perforated stainless steel element (stainless steel of 316 or better) shall be provided. One (1) no. automatic drain valve (size not less than 100 mm) which shall operate on the basis of both i.e. set time and differential pressure shall be provided. In addition to automatic drain valve, an additional valve for manual drain shall also be provided of same size (not less than 100 mm). The shell of strainer shall be made from seamless pipe. The pressure drop shall not be more than 0.2 bars. Pressure sensors shall be provided for differential pressure indication across the filters. The filter shall preferably be capable of removal of all material as small as 2000 micron. The valves, fittings, other hardwares etc. shall be of stainless steel.

26.5.8.3 Automatic self-cleaning Simplex filters

The automatic self cleaning simplex strainer shall be of sufficient capacity to match the capacity of the cooling water circuit.

The filters shall be heavy duty preferably wedge wire type suitable for continuous duty to arrest debris, tree leaves, pebbles, coarse sand etc that may appear in the water. The filter shall be of stainless steel and shall have cast steel/carbon body of seamless pipe of min. 10 mm thickness. One (1) no. automatic drain valve (size not less than 100 mm) which shall operate on the basis of both i.e. set time and differential pressure shall be provided. In addition to automatic drain valve, an additional valve for manual drain valve shall also be provided of same size (not less than 100 mm). Automatic control shall be integral part of the automatic filter. Strainer shall be fitted with swing type bolt and davit arm arrangement for quick opening for easy maintenance. The geared motor arrangement shall be designed other than the top position. Proven scrapper arrangement for self cleaning shall be provided. Automatic back-flushing arrangement of filters from pump discharge shall also be provided. Valves, fittings, fasteners, hardwares etc shall be of stainless steel.

Automatic filters shall be capable of removing all the material of 1000 microns and above size in raw water circuit and 100 microns and above in chilled water and secondary cooling water circuit. The design shall have proven performance for continuous operation without clogging. The pressure drop across the filters shall be less than approximately 0.2 bars and adequate sensing arrangement shall be provided to sense the pressure drop across the strainer for further integration with plant SCADA system. The free flow area ratio of filter shall be 1:5.

Differential pressure gauges and differential pressure switches across the each filter shall be provided with visual indication for alarm purpose. The silt flushing operation shall be controlled/ initiated by both pressure difference and pre set time.

26.5.8.4 Wide Gap Type Heat Exchanger

Heat exchanger shall be wide gap plate type capable of transferring all the heat gained during the circulation through the various coolers to raw water. Gap of minimum 10-12 mm in raw water side and minimum 4-6 mm in secondary water side shall be taken into consideration for designing wide gap plate type heat exchanger.

Material of the plates shall be stainless steel (ASTM A 316 or better) and need to be suitable for prevailing water conditions. The pressure drop (in close loop) across heat exchanger shall not exceed 0.2 bar. The design of heat exchanger shall be based upon the temperature rise mentioned in the PTS clause 24.3.1. The thickness of plate shall be at least 0.8 mm.

The heat exchanger shall be provided with flanged connections for cooling water inlet and outlet on both sides. Back flushing arrangement with drain valve shall be provided. Foundation frame for heat exchanger shall be provided. Temperature indicators, temperature transmitter, differential pressure switches & gauges shall be provided at the inlet and outlet, at the raw and at the secondary waterside of the heat exchanger for visual local and remote indication and alarm.

26.5.8.5 Chilled water system make up tank

A separate make up water tank/expansion tank for chilled water system shall be provided. The tank shall be provided with an automatic filling valve in the filling line including level switch, level gauge and level transducer for local and remote alarm/ indication. All other required instrumentation, connections etc. as required, shall also be provided.

26.5.9 Ducts

All ducts for the ventilating and air conditioning systems shall be of high quality galvanized sheet metal. The exhaust air ducts of the battery room shall be corrosion, rust and acid resistant material. Ducts passing through the machine hall and service bay shall maintain the aesthetic of the floors and shall be finalised during detailed engineering.

The sheet thickness shall not be less than the thickness indicated in IS 655.

All ducts shall be airtight with opening at suitable locations. If necessary, the rectangular elbows shall be equipped with aerodynamically formed guiding vanes.

All main/take-off/other branches shall be equipped with an adjustable volume extractor, which assists in balancing by directing a regulated amount of air for supply outlets from the main duct. Volume dampers shall be two gauges heavier than gauge of the large duct and shall be rigid in construction to the passage of air.

Ducts shall be supported by structural angles, hanging in rods with adjustable nuts, anchored to the ceiling or walls by concrete fastener bolts or anchors. The material for all support, hanger, rods, angle etc shall be hot dip galvanised. Maximum allowable distance between duct supports shall be 1500mm as per as per IS 655 whichever is lesser.

For ventilated areas ducts shall be fitted with duct mounted heater boxes for maintaining the required temperature in the area caterer.

26.5.10 Insulations

The cooled down supply air ducts shall be insulated to prevent condensation on the duct surfaces.

The insulation material (thickness to be as per detailed design) shall be non-hygroscopic, rot-proof, preferably foamed nitrile rubber. The insulation mats or plates shall be fastened on the duct and wrapped with aluminium foils. The insulation material shall also be sufficient to obtain the acoustical guarantee.

The cooling water piping shall be properly insulated. The mentioned insulations shall be included in the supply.

26.5.11 Grills and diffusers

The supply air grills shall be used for correct air distribution by horizontal and vertical adjustable bars of sidewall installations. The return air grills shall be suitable for adjustment from outside and shall be equipped with 45° horizontal fixed fins.

The grills / diffusers in the control rooms / offices and other areas where false sealing have been provided shall be decorative type and in accordance to the architecture of the control room and conference room and aesthetic of the area. Material of construction, type colour etc. shall be decided during detailed engineering.

The design has to fit the architectural false ceiling and lighting schemes and the grills be made of extruded aluminium powder coated with high surface finish and the sizes have to correspond to the fixed noise criteria.

Grills for the battery room shall be of acid corrosion and rust resistant material. The blades & frame shall be minimum 16 gauge thick.

26.5.12 Outside air louvers

Outside air louvers of each of the fresh air and exhaust air systems shall prevent the entrance of rain, insects, birds and trash into the ducts.

They shall be stamped and pressed out of one piece of aluminium sheet of at least 2 mm thickness. The frames shall also be made of extruded aluminium.

26.5.13 Louver dampers

Double acting louvers shall be fabricated with a welded frame of rolled section. Bearings shall be of the oil retaining porous bronze type and shall be fixed into the frame.

The louver dampers as well as the steel frames shall be hot-dip galvanized after fabrication. Louvers and dampers shall be equipped with related limit switches to be used in control and interlocking system.

The fire /smoke dampers shall be provided wherever required. The damper shall be multi blade motorised operated type .

The blades shall be minimum 1.6 mm thick aluminium. The frame shall be minimum 2 mm thickness.

26.5.14 Air Filter

The air filter media shall have layers of V-fold HDPE (High density Polythylene) supported by Aluminium wire mesh with water as the mode of cleaning medium. Separation degree may be similar to EU4 (rough air filter), according to EUROVENT or DIN 24185 standards.

The frame structure & casing of the panel cells shall be made of aluminium/GI sections with min 16G thickness.

A properly positioned pressure gauge of the inclined tube type shall give an indication of the degree of dust loading on the filters for establishing the periods between services.

26.5.15 Exhaust Air Fans

Exhaust air fans shall be adjustable / fixed axial flow fans. Axial air fans shall be of the multi blade vane type. The vanes shall be adjustable individually at standstill. The hub of the impeller shall be directly coupled to the motor shaft and its diameter adapted to the motor frame. The impeller shall be statically and dynamically balanced.

All bearings shall be pre-lubricated, self-aligning and selected for a minimum of 40000 hour's average life at the maximum design rating. If, however, frequent lubrication is required this should be possible from the outside of the fan casing without disturbing the fan duct assembly. Bearing supports shall be specially designed for trouble-free bearing service. All fan shafts and wheels shall be designed to operate at their maximum rated speed, which is below the first critical speed.

All motor bases shall be adjustable and V-belt drives selected for 120 percent of motor power. The casing of the air fans shall be made of hot-dip galvanized steel or aluminium. Where the impeller is accessible in operation, guards shall prevent injuries to maintenance personnel. Anti-vibration mountings shall be provided for each fan.

Centrifugal type exhaust fan/blowers shall consist of fans/blowers, motor, casings, air filters and dampers with enclosures. The fans, casings, air filters and dampers shall be as per relevant sub –clauses of Air handling unit of this section.

26.5.16 Bolts, nuts and washers

All bolts, screws and nuts shall be of metric thread standards and have hexagonal heads. The material shall be of stainless steel.

26.5.17 Controls and electrical equipment

The HVAC system shall be equipped with operation on fully automatic mode and manual mode. All the necessary cabling between the control panels and the field HVAC components (as fans, sensors, pumps, valves, air dampers, etc.) shall be included in the supply. All the individual damper control panels shall be enclosed preferably in a separate panel.

Each of the control systems shall be equipped with the necessary control, interlocking and security devices. Any failure or breakdown in the control system shall be indicated by a signal on the respective control panel, as well as remotely in the main control room. Potential free contacts and terminals for remote indication of the alarms shall be provided in the panels. All necessary protection viz. single phasing, IDMT and Instantaneous over current relays, under voltage relays etc. shall be provided.

Pumps shall be provided with electric motors, anchor bolts and other mounting materials. The pumps shall be with starting unit suitable for 415V ±10%, 50Hz ± 5% with contacts for remote operation / indication.

26.5.17.1 Automatic control and regulation

i) The HVAC system shall be equipped with a fully independent computerised automatic control system for efficient operation, which shall be included in the supply. It should automatically stop the supply of fresh/recirculated air to the affected zone immediately in case of fire detection and initiate smoke extraction. The necessary cabling and other accessories for fire input from fire relay panel shall be in the scope of contractor. One (1) HVAC workstation at control room with latest configuration (with minimum 1TB SDD and 16 GB RAM) and 32" LED monitor along with licensed firmware & operating software and key with lifetime validity.

ii) All sensors and instruments (temperature, pressure, humidity, etc.), limit switches, etc. required for automatic regulation and monitoring of proper service of the systems shall be included in the supply.

26.5.17.2 Manual mode

Individual starting and stopping of equipments by push buttons.

26.6 Drawings, Documents and Design Calculations

26.6.1 Design memorandum

The Contractor shall submit to Employer a design memorandum prepared in accordance to clause 1.6 "Record and Documentation" of "Section 1- General Technical Requirements."

26.6.2 Drawings and documents

The Contractor shall submit all the drawings and documents in accordance with requirements stipulated in "Section 2 - Technical Documents" of "General Technical Specification (GTS)".

26.6.3 Design calculation

The Contractor shall submit the design calculation as per Clause 2.4 of "General Technical Specification (GTS)" covering at least the following, for approval.

i) Sizing of ducts for air distribution,

ii) Calculation for selecting the Blowers, AHUs and other fans capacity,

iii) Calculation for selecting the water cooled packaged Air conditioner capacity,

iv) Cooling loads, Heating loads, air flow rate and temperature and humidity conditions at all locations/areas,

v) Calculation for selection of raw water pumps and motors.

The Contractor shall also provide other calculations as required by the Employer for his approval of the Contractor's design.

26.7 Delivery, Installation and Commissioning

The Contractor shall follow the requirements of Delivery, Installation and commissioning elaborated in clause 1.7 "Delivery, Installation and commissioning" of "Section 1 - General Technical Requirements."

26.8 Spare parts

Recommended spare parts shall be supplied in accordance to clause 1.8 "Spare Parts" of "Section 1 - General Technical Requirements". Specified spare parts to be supplied under this section are as follows:

S. No.	Description	Quantity
1.	Air Filter bank set	1 no. of each type and size
2	V- belts set	2 nos. of each type and size
3	Primary, Secondary and chilled cooling water pump,	
a.	Complete pump-motor sets	1 no. each type
b.	Impellers	1 no. each type
c.	Stators	1 no. each type
d.	Shafts	1 no. each type
e.	Pump mechanical seals	2 nos. of each type
f.	Set of seals, gasket and O-rings	2 nos. of each type
g.	Pump bearings each size & type	2 nos. of each type
h.	Motor bearings each size & type	2 nos. of each type
4	Automatic self cleaning filter	
a.	Set of complete element assembly as per design for primary / secondary / chilled water cooling circuit	1 no. of each type
b.	Pneumatic and motorised valve of each	2 nos. of each type

	type	
c.	Motor for automatic filter of each type	1 no. of each type
d.	Solenoid valve of each type	2 nos. of each type
5	Air handling fan-motor set	1 no. of each type and size
6	Exhaust air fan / Blowers fan-motor set	1 no. of each type and size
7.	Cooling coils set	2 nos. of each type and size
8.	MCCB , MCB, MPCB, Overload relay & Contactors	1 no. each type
9.	Fuses	5 nos. of each type and rating
10.	Indicating lamps (LED)	10 nos. of each colour (red, blue, yellow, green, amber)
11.	Push buttons	5 nos. of each type
12	Heat Exchanger plates and gaskets	50 nos.
13	Motorised valve along with motor panel and associated accessories	2 nos. of each type & size
14	Pressure gauges and pressure switches	2 nos. of each type & size
15	Temperature gauge, temperature switches/ transmitter	2 nos. of each type and size
16	Valves of DN 80 and above	2 nos. of each size and type
17	I/O Modules	5 nos. of each type
18	Field/bus Controllers and Network Controller	1 nos. of each type

26.9 Tools and Instruments

The Contractor shall supply all necessary tools and instruments etc. for installation, repair and maintenance in accordance to clause 1.9 “Tools and Instruments” of “Section 1 - General Technical Requirements”.

26.10 Special tools

The Contractor shall propose the list of special tools including their make and detailed specification as recommended by manufacturer(s), to be accepted by the Employer.

The proposed list of special tools must include the following in addition to tools recommended by manufacturer(s):

i) Two (2) hot air blowers having:

a) Power input :1500 W,

b) Temperature control :150/560°C,

c) Air flow: 400/450 litre/min

26.11 Quality Assurance and Testing

The Contractor shall follow the quality assurance and testing requirements specified separately in "Quality assurance and Testing Specifications (QTS)".

A Navratna Company

URI-I STAGE-II HYDROELECTRIC PROJECT

Volume III C (TDS)

4 MAIN INLET VALVES AND ACCESSORIES

4.1 Guaranteed Technical Particulars

Item / Clause No.	Parameter	Unit	Requirement	Bidder's confirmation /seal / signature
A.				
1	Type /designation	-	Spherical	Confirmed
2	Inside diameter of Valve	mm	2800	Confirmed
3	Valve normal operating oil pressure	bars	100 -160	Confirmed
3.1	Medium	-	Nitrogen/oil	Confirmed
4	Adjustment of Closing and opening time of the valve	sec.	60-120	Confirmed
5	Number of closing / opening operations possible at minimum oil pressure without the operation of oil pump and dry Nitrogen admission	-	2 "C"+1 "O"	Confirmed
6	Design presssure for spherical Valve	bars	38	Confirmed
7	Corrosion and abrasion allowance for valve components	mm	3	Confirmed
8	**Material standard,Class, Grade/Type of**			
8.1	Valve body	-	As per PTS Cl.no. 4.5.3	Confirmed
8.2	Valve disc			Confirmed
8.3	Valve trunnions			Confirmed
8.4	Connection Sleeve			Confirmed
8.5	Permanent seat of seals, seal retainers,maintenance seal and fasteners			Confirmed
8.6	Service seal			
9	Counter weight mounted on trunnion	-	Yes	Confirmed
10	Capability of the valve to open at 50 % unbalance condition	-	Yes	Confirmed
11	Capability of the valve to close at maximum flow rate and maximum gross head of 139.45 m by action of counter weights	-	Yes	Confirmed
12	Self - lubrication	-	Yes	Confirmed
13	Butterfly Valve shall be capable to operate under (detailed as per Enclosure-1) ppm during high flood	-	Yes	Confirmed
14	Maximum leakage from Spherical valve when fully closed			Confirmed
14.1	- through service seal	-	1 lpm/ meter periphery of seal	Confirmed
14.2	- through maintenance seal	-	3 lpm/ meter periphery of seal	Confirmed
15	Spherical Valve OPU oil & bearing oil should be same grade	-	Yes	Confirmed
16	Type, structure and arrangement of Counter weight shall be specifically got approved during detailed engineering.	-	Yes	Confirmed

4 MAIN INLET VALVES AND ACCESSORIES

4.1 Guaranteed Technical Particulars

Item / Clause No.	Parameter	Unit	Requirement	Bidder's confirmation /seal / signature
17	Applicable standard for MIV	-	IS 7332	Confirmed
18	Complete Compliance of specification	-	Yes	Confirmed

7 13.8 kV Bus Duct

7.1 Guaranteed Technical Particulars

Item / Clause No.	Parameter	Unit	Requirement	Bidder's confirmation /seal / signature
1	Nominal system voltage	kV	13.8	Confirmed
2	Highest system voltage	kV	24	Confirmed
3	Rated continuous currents			
3.1	- Main bus	A	8000	Confirmed
3.2	- Tap off Bus	A	As per requirement	Confirmed
3.3	- Delta Bus	A	5000	Confirmed
4	Maximum temperature rise above ambient temp. 40^0 C at rated continuous current (all connections)			
4.1	- Bus Conductor	^{0} C	65	Confirmed
4.2	- Out side surface of enclosure	^{0} C	30	Confirmed
5	Rated Power frequency withstand voltage for one minute	kV_{rms}	Min. 55	Confirmed
6	Rated Lightning impulse withstand voltage	kV_{peak}	Min. 125	Confirmed
7	Current transformers:			
7.1	Nominal voltage of equipment	kV	13.8	Confirmed
7.2	Highest voltage for equipment	kV	24	Confirmed
7.3	Rated short duration power frequency withstand voltage, 1 min.	kV_{rms}	Min. 55	Confirmed
7.4	Rated lightning impulse withstand voltage	kV_{peak}	Min. 125	Confirmed
8	Potential transformers:			
8.1	Nominal voltage of equipment	kV	13.8	Confirmed
8.2	Highest voltage for equipment	kV	24	Confirmed
8.3	Rated short duration power frequency withstand voltage, 1 min.	kV_{rms}	Min. 55	Confirmed
8.4	Rated lightning impulse withstand voltage	kV_{peak}	Min. 125	Confirmed
9	Material of of bus Conductor & Enclosure	-	Aluminium alloy Grade 19501, as per IS 5082	Confirmed
10	Thermal Short time with stand current, 1s (for all connections)	kA_{rms}	in line with PTS clause no 7.3.2	Confirmed
11	Rated Frequency	Hz	50	Confirmed
12	Split phase protection CT rated current	A	To be decided during Detail Engg.	Confirmed
13	Neutral-end CT rated current	A	8000/5	Confirmed
14	Line-end CT rated current	A	8000/5	Confirmed
15	CT Accuracy Class		PS / 0.2S/5P20	Confirmed
16	PT transformation ratio	-	(13.8/√3) kV / (110/√3) V / (110/√3) V	Confirmed
17	PT Accuracy class	-	3P / 0.2	Confirmed
18	Appropriate arrangement included in Design /construction for quick linkage / removal of shorting bar/link & easy acess	-	Yes	Confirmed
19	Applicable standards	-	As per PTS Clause no 7.5.1	Confirmed
20	Complete Compliance of specification		Yes	Confirmed

8 GSU TRANSFORMERS

8.1 Guaranteed Technical Particulars

Item / Clause No.	Parameter	Unit	Requirement	Bidder's confirmation /seal / signature
A.				
1	Rated continuous MVA at max. ambient temperature:	MVA	52	Confirmed
2	Rated voltages			Confirmed
2.1	- HV winding	kV	400/√3	Confirmed
2.2	- LV winding	kV	13.8	Confirmed
3	Highest voltage of equipment Um for			Confirmed
3.1	- HV winding	kV	420/√3	Confirmed
3.2	- LV winding	kV	17.5	Confirmed
4	Maximum temperature rise, at rated power with a reference maximum ambient temperature of 40deg C			Confirmed
4.1	- top oil (measured by thermometer)	^{0} C	45	Confirmed
4.2	- windings (measured by resistance)	^{0} C	50	Confirmed
4.3	Tank hot spot temperature	^{0} C	110	Confirmed
5	Type of cooling	-	OFWF /ODWF	Confirmed
6	GSU Transformer Losses			
6.1	Maximum permissible No-load losses at rated voltage and rated frequency	kW	40	Confirmed
6.2	Maximum permissible Load loss at rated output, rated frequency and corrected for 75°C winding temperature	kW	150	Confirmed
6.3	Maximum permissible Auxilliary losses at the rated output,rated voltage,rated frequency and ambient temperature	KW	6	Confirmed
7	GSU Transformer is a single phase, 50Hz, Seprate winding transformer	-	Yes	Confirmed
8	Line terminal AC withstand voltage (LTAC)			
8.1	- HV winding / Bushing	kV (r.m.s)	630/750	Confirmed
8.2	- HV neutral winding / Bushing	kV (r.m.s)	70 / 77	Confirmed
9	Lightning impulse withstand voltage			
9.1	- HV winding / Bushing	kV (Peak)	1425/1550	Confirmed
9.2	- HV neutral winding / Bushing	kV (peak)	170/170	Confirmed
9.3	- LV winding / Bushing	kV (peak)	95/95	Confirmed
10	Switching impulse withstand voltage of H.V Winding and Bushing	kV (peak)	1175	Confirmed
11	Vector group		YNd11	Confirmed
12	% impedance voltage at rated power referred to 75°C winding temperature	-	12.5 % (No -ve tolerance)	Confirmed

8 GSU TRANSFORMERS

8.1 Guaranteed Technical Particulars

Item / Clause No.	Parameter	Unit	Requirement	Bidder's confirmation /seal / signature
13	Short circuit withstand capacity			
13.1	-Short circuit apparent power	-	As per table-2 of IEC 60076-5	Confirmed
13.2	-Short circuit withstand time	sec	03	Confirmed
14	Max. flux density at rated voltage and frequency	Tesla	Not to exceed 1.7 Tesla	Confirmed
15	Type of Insulatiuon			
15.1	- HV winding	-	Minimum Class A (winding insulation shall be and able to withstand 420kV continuously)	Confirmed
15.2	- LV winding	-	Minimum Class A (Uniformly insulated)	Confirmed
16	Material of the winding conductor	-	Copper	Confirmed
17	No. Of Oil-water Coolers	-	As per Clause 8.5.8.1 of PTS	Confirmed
18	No. Of Oil Pumps	-	As per Clause 8.5.8.1 of PTS	Confirmed
19	Oil Quality	-	As per Clause 8.5.24.1 of PTS	Confirmed
20	Hotspot Temperature measuring system	-		
20.1	No of fibre sensors in each transformer	-	As per Clause 8.5.21.2 of PTS	Confirmed
20.2	Temperature measuring range	-	0^0 C to 150^0 C	Confirmed
21	Type of Conservator	-	Air Bag type	Confirmed
22	Type of Bushing			
22.1	- HV terminal	-	Oil/SF6 bushing	Confirmed
22.2	- LV Terminal	-	Oil / Air Bushing	Confirmed
22.3	- Neutral Terminal	-	Oil / Air Bushing	Confirmed
23	Continuous on-line moisture-in-oil measuring system & DGA	-	As per Clause 8.5.23 of PTS	Confirmed
24	Rails	-	As per Clause 8.1.1.(iii) of PTS	Confirmed

8 GSU TRANSFORMERS

8.1 Guaranteed Technical Particulars

Item / Clause No.	Parameter	Unit	Requirement	Bidder's confirmation /seal / signature
25	Core material	-	High grade Cold Rolled Non Ageing Grain Oriented Silicon Steel Laminations	Confirmed
26	Buchholtz relay, WTI, OTI, flow switch, SPR & PRD included in supply	-	Yes	Confirmed
27	Ports for Oil sampling, DGA & Moisture-in-oil system	-	Yes	Confirmed
28	Standards applicable as per PTS clause no. 8.5.1	-	Yes	Confirmed
29	Compliance of Transportation Limitation of Transformer	-	As per Clause 1.5.1.7 of Volume IIIB (GTR)	Confirmed
30	Short circuit testing to be done on one Transformer, if applicable as per PTS clause no. 8.6.4	-	Yes	Confirmed
31	Provision of nitrogen injection system for transformer fire fighting protection (this is in addition to HV water spray syetm covered in chapter 29 of PTS)	-	Yes	Confirmed
32	Limit of hot spot temperature for which the transformer is designed as per applicable standard	^{0}C	not more than 98^{0}C	Confirmed
33	Applicable standards	-	As per PTS cluase 8.5.1	Confirmed
34	(L X W X H) of Transformer at location as per Drawings of transformer cavern	-	Yes	Confirmed
35	Complete Compliance of specification	-	Yes	Confirmed

9 BUS REACTOR

9.1 Guaranteed Technical Particulars

Item / Clause No.	Parameter	Unit	Requirement	Bidder's confirmation /seal / signature
A.				
1	Rated continuous MVAR at max. ambient temperature:	MVAR	26.67	Confirmed
2	Rated voltages			Confirmed
	winding	kV	420/√3	Confirmed
3	Highest voltage of equipment Um for			Confirmed
	winding	kV	420/√3	Confirmed
4	Maximum temperature rise, at rated power with a reference maximum ambient temperature of 40 deg C			
	- top oil (measured by thermometer)	^{0}C	45	Confirmed
	- windings (measured by resistance)	^{0}C	50	Confirmed
	Tank hot spot temperature	^{0}C	110	Confirmed
5	Type of cooling	-	OFWF	Confirmed
6	Bus Reactor Losses			
6.1	Maximum permissible Total Load losses at rated voltage and rated frequency	kW	79	Confirmed
6.2	Maximum permissible Auxilliary losses at the rated output,rated voltage,rated frequency and ambient temperature	kW	10	Confirmed
7	Bus reactor is a single phase, 50Hz, bus connected reactor	-	Yes	Confirmed
8	Line terminal AC withstand voltage (LTAC)			
	winding	kV	383 (with PD) for one hour	Confirmed
	Bushing	kV (r.m.s)	750	Confirmed
	Neutral/Bushing (minimum)	kV (r.m.s)	275/305	Confirmed
9	Lightning impulse withstand voltage			
	winding / Bushing	kV (Peak)	1425/1550	Confirmed
	neutral / Bushing	kV (Peak)	650/650	Confirmed
10	Switching impulse withstand voltage of winding and bushing	kV (Peak)	1175	Confirmed
11	Type of Insulatiuon			
	winding	-	Minimum Class A (winding insulation shall be and able to withstand 420kV continuously)	Confirmed

9 BUS REACTOR

9.1 Guaranteed Technical Particulars

Item / Clause No.	Parameter	Unit	Requirement	Bidder's confirmation /seal / signature
12	Type of Bushing			
	- HV terminal	-	Oil/SF6 bushing	Confirmed
	- Neutral Terminal	-	Oil / Air Bushing	Confirmed
13	Short circuit apparent power	MVA	40000	Confirmed
14	Max. flux density at rated voltage and frequency	Tesla	Not to exceed 1.7 Tesla	Confirmed
15	Material of the winding conductor	-	Copper	Confirmed
16	Oil Quality	-	As per Clause 8.5.23.1 of PTS	Confirmed
17	Hotspot Temperature measuring system	-	Yes	Confirmed
18	Temperature measuring range	-	0^0 C to 150^0 C	Confirmed
19	Type of Conservator	-	Air Bag type	Confirmed
20	Rails	-	As per Clause 9.1.1.(iii) of PTS	Confirmed
21	Core material	-	HIgh grade Cold Rolled Non Ageing Grain Oriented Silicon Steel Laminations	Confirmed
22	Buchholtz relay, WTI, OTI, flow switch, SPR & PRD included in supply	-	Yes	Confirmed
23	Ports for Oil sampling, DGA & Moisture-in-oil system	-	Yes	Confirmed
24	Standards applicable as per PTS clause no. 9.5.1	-	Yes	Confirmed
25	Compliance of Transportation Limitation of Reactor	-	As per Clause 1.5.1.7 of Volume IIIB (GTR)	Confirmed
26	Provision of nitrogen injection system for reactor fire fighting protection (this is in addition to HV water spray system covered in chapter 29 of PTS)	-	Yes	Confirmed
27	Limit of hot spot temperature for which the reactor is designed as per applicable standard	^{0}C	not more than 98^0C	Confirmed
29	(L X W X H) of Reactor at location as per Drawings of transformer cavern	-	Yes	Confirmed
30	Complete Compliance of specification	-	Yes	Confirmed

10 XLPE CABLE

10.1 Guaranteed Technical Particulars

Item / Clause No.	Parameter	Unit	Requirement	Bidder's confirmation /seal / signature
1	Applicable Standard	-	IEC 62067	Confirmed
2	Main data (applicable to cables and accessories)			
2.1	Rated system voltage	kV	400	Confirmed
2.2	Highest voltage for equipment Um	kV	420	Confirmed
2.3	Frequency	Hz	50 ± 5 %	Confirmed
2.4	Rated withstand voltage to earth of cable and cable sealing			
	- Power frequency(rms) for 60 min.	kV	440	Confirmed
	- Lighting Impulse(peak value)	kV	1425	Confirmed
	- switchting Impulse	kV	1050	Confirmed
2.5	Maximum partial discharge in line with IEC 62067	pC	5	Confirmed
2.6	Maximum permissible operating temperatures at			
	- continuous rated operation	°C	90	Confirmed
	- short-circuit condition(5 sec max)	°C	250	Confirmed
2.7	Cable construction			
2.7.1	- conductor cross section			
2.7.1.1	GIS to Pothead Yard	mm^2	2000	Confirmed
2.7.1.2	Interconnection GIS of Uri Stage 1 & 2	mm^2	2000	Confirmed
2.7.2	- conductor material	-	Copper	Confirmed
2.7.3	- type of screen	-	Wire/ Corrugated/tape	Confirmed
2.7.4	- bending radius	-	not more than 23 x Outer dia.	Confirmed
2.7.5	- screen material	-	Copper/ Al	Confirmed
2.7.6	- internal semi-conductor material	-	XLPE semi-conducting shield	Confirmed
2.7.7	- insulation material	-	XLPE	Confirmed
2.7.8	- external semi-conductor material	-	XLPE semi-conducting shield	Confirmed
2.7.9	- outer sheath material	-	PE with HFFR layer	Confirmed
2.8	Rated continuous current			
2.8.1	GIS to Pothead yard	A	1800	Confirmed
2.8.2	GIS Uri I to GIS Uri St II	A	1800	Confirmed
2.9	short time withstand current 1s			
	- of conductor	kArms	63	Confirmed
	- of screen	kArms	63	Confirmed
2.10	Dynamic short circuit withstand current	kApeak	157.5	Confirmed
2.11	GIS cable sealing ends :			
2.11.1	Type	-	prefabricated joint	Confirmed
2.12	Potheadyard cable sealing ends :			
2.12.1	Type	-	prefabricated joint	Confirmed
2.13	Complete Compliance of specification		Yes	Confirmed

11 GAS INSULATED SWITCHGEAR

11.1 Guaranteed Technical Particulars

Item / Clause No.	Parameter	Unit	Requirement	Bidder's confirmation /seal / signature
1.1	Standard		IEC-62271(all sections)	Confirmed
1.2	Rated Voltage Un	kV	420	Confirmed
1.3	Rated Frequency in			
	-Normal condition	Hz	50	Confirmed
	-Exceptional Condition	Hz	As per IEC 62271-203	Confirmed
1.4	Power frequency withstand voltage, (One) 1 minute			
	- Phase to ground	kV rms	650	Confirmed
1.5	Lightning impulse withstand voltage			
	- against ground	kV	1425	Confirmed
	-across the isolating distance	kV	1425(+240)	Confirmed
1.6	Switching impulse withstand voltage			
	- against ground	kV	1050	Confirmed
	,- between phases	kV	1575	Confirmed
	-across the isolating distance	kV	900(+345)	Confirmed
1.7	Maximum partial discharge of switch gear assembly	-	In line with IEC 62271-203	Confirmed
1.80	Maximum leakage rate in percent of the respective volume, per year	%	0.5%	Confirmed
1.10	Minimum symmetrical short-time withstand current, (One) 1 second	kA	63	Confirmed
1.11	Minimum peak short-circuit withstand current	kA	157.5	Confirmed
1.12	**Circuit Breaker**			
1.12.1	Standard		IEC 62271-100	Confirmed
1.12.2	Rated continuous current	A	4000	Confirmed
1.12.3	Rated symmetrical short-circuit breaking current	kA	63	Confirmed
1.12.4	Rated short-circuit making current	kA	157.5	Confirmed
1.12.5	Line charging current breaking capability	A	400	Confirmed
1.12.6	Small inductive current breaking capability (without producing excessive over voltages)	A	As per IEC 62271-110	Confirmed
1.12.7	Operating sequence			
	- Line breakers	-	O-0.3s-CO-3 min–CO	Confirmed
	- Generator feeder & bus coupler breakers	-	O-3min-CO-3 min–CO	Confirmed
1.12.8	Total breaking time	ms	<40 ms	Confirmed
1.12.9	Total closing time	ms	<100 ms	Confirmed
1.12.10	First pole to clear factor	-	1.3	Confirmed
1.12.11	Operating Mechanism	-	Spring/hydraulic/ other	Confirmed
1.12.12	Compliance to Class C2, E2 and M2	-	Yes	Confirmed

11 GAS INSULATED SWITCHGEAR

11.1 Guaranteed Technical Particulars

Item / Clause No.	Parameter	Unit	Requirement	Bidder's confirmation /seal / signature
1.12.13	Minimum number of operations at full short circuit rating	-	as per IEC /CEA guidelimes	Confirmed
1.12.14	DC offset current and time constant		58%,45 ms	Confirmed
1.13	**Disconnector**			
1.13.1	Standard	-	IEC 62271-102	Confirmed
1.13.2	Rated continuous current	A	4000	Confirmed
1.13.3	Minimum make and break capability for capacitive current	A	0.5	Confirmed
1.13.4	Total operating time (closing or opening cycle)	-	As per accepted international practice	Confirmed
1.14	**Fast Acting Grounding Switch**			
1.14.1	Standard	-	IEC 62271-102	Confirmed
1.14.2	Rated short-circuit making current (peak)	kA	157.5	Confirmed
1.14.3	Rated switching capacity			
	- inductive currents/voltage	-	160A/10 kV	Confirmed
	- capacitive currents/voltage	-	18A/20 kV	Confirmed
1.14.4	Total operating time (closing or opening cycle)	-	As per accepted international practices	Confirmed
	- fast acting time	-	As per accepted international practices	Confirmed
1.15	**Safety Grounding Switch**			
1.15.1	Standard	-	IEC 62271-102	Confirmed
1.15.2	Rated short time withstand current, (One) 1 s	kA	63	Confirmed
1.15.3	Total operating time(closing or opening cycle)	-	As per accepted international practices	Confirmed
1.16	**Bus Voltage Transformers**			
1.16.1	Standard	-	IEC 61869-3	Confirmed
1.16.2	Rated transformation ratio			
	- for protection	-	$(400/\sqrt{3})$kV/$(110/\sqrt{3})$ V	Confirmed
	- for metering	-	$(400/\sqrt{3})$kV/$(110/\sqrt{3})$ V	Confirmed
1.16.3	Accuracy class / rated burden			
	- for protection	-	3P	Confirmed
	- for metering	-	0.2	Confirmed
1.17	**Surge Arrestor**			
1.17.1	Standard	-	IEC 60099-4	Confirmed
1.17.2	System voltage	kV	420	Confirmed

11 GAS INSULATED SWITCHGEAR

11.1 Guaranteed Technical Particulars

Item / Clause No.	Parameter	Unit	Requirement	Bidder's confirmation /seal / signature
1.17.3	rated arrestor voltage	kV	336	Confirmed
1.17.4	rated nominal discharge current	kA	20	Confirmed
1.17.5	Minimum continuous operating voltage (COV)	kV	267	Confirmed
1.17.6	One minute (dry) power frequency withstand voltage of arrestor housing	kV	630	Confirmed
1.17.7	Impulse withstand voltage of arrestor housing with 1.2/50 ms wave	kV	1425	Confirmed
1.18	**Current Transformer**			Confirmed
1.18.1	Standard	-	IEC 61869-2	Confirmed
1.18.2	Current ratio	-		
	-Generator Transformer bay/ Line bay/Bus coupler bay	-	As per PTS cluse 11.3 F)	Confirmed
	-Reactor bay	-	As per PTS cluse 11.3 F)	Confirmed
1.18.3	Accuracy class	-		
	For protection	-	PS	Confirmed
	For metering	-	0.2S	Confirmed
1.19	**SF6 properties**			
	Standard	-	IEC 60376-2018	Confirmed
	Water	-	<200 µl/l (i.e. 200 ppmv)	Confirmed
	Carbon Tetra Fluoride	-	<4 000 µl/l (i.e. 0,4 % volume) for pure SF6	Confirmed
	Air	-	<10 000 µl/l (i.e. 1 % volume) for pure SF6	Confirmed
1.20	**Partitioning Provision**			
1.20.1	Compliance with IEC 62271-203 Annex -F	-	Yes	Confirmed
1.20.2	Provision of partioning so that maintenance of one bus with other bus in operation	-	Yes	Confirmed
1.20.3	Provision of partioning so that maintenance of one feeder with adjecent feeders in operation	-	Yes	Confirmed
1.21	Gas monitoring system with provision of alarm and tripping and integration with plant scada system	-	Yes	Confirmed
1.21.1	Parameters monitored:			
	Gas Density	-	Yes	Confirmed
	Gas Pressure	-	Yes	Confirmed
	Leakage	-	Yes	Confirmed
	SF_6 gas pressure alarm system	-	Yes	Confirmed

11 GAS INSULATED SWITCHGEAR

11.1 Guaranteed Technical Particulars

Item / Clause No.	Parameter	Unit	Requirement	Bidder's confirmation /seal / signature
1.22	Online partial discharge measuring system with UHF couplers and integration with plant scada system	-	Yes	Confirmed
1.24	Gas processing system	-	Yes	Confirmed
1.25	Interlocking of operation of CB, Isolator and earthing switch	-	Yes	Confirmed
1.26	Conformance to IEC 60859/ IEC 62271-209:2007 for cable connection for GIS	-	Yes	Confirmed
1.27	Complete Compliance of specification	-	Yes	Confirmed
1.28	Design of GIS including Provision of universal interfacing for extension of GIS with GIS of any other make/model. Refer PTS clause no. 11.5.2 and 11.6.2	-	Yes	Confirmed

14 CONTROL AND MONITORING SYSTEM

14.1 Guaranteed Technical Particulars

Item / Clause No.	Parameter	Unit	Requirement	Bidder's confirmation /seal / signature
1	**General**			
1.1	Type	-	Distributed and independent control modules in hierarchical control levels.	Confirmed
1.2	Number of system levels	-	4 (including LCC, UCB, Plant SCADA & Remote)	Confirmed
2	Performance Data			
2.1	System Guaranteed response times			
2.1.1	Order response time	ms	≤ 500 msec	Confirmed
2.1.2	Alarm response time	ms	≤ 1 msec	Confirmed
2.1.3	Event response time	ms	≤ 1 msec	Confirmed
2.2	Overall control and monitoring system availability for top order event "Availability to retrieve all process data from LCBs and operate all breakers"	%	≥ 99.98	Confirmed
2.3	Availability of data channel for real time, full duplex transmission at the rate of 1Gbps between two remote stations	%	≥ 99.99	Confirmed
2.4	Availability of expert for 1 year from date of commissioning of first unit	-	Yes	Confirmed
2.5	Accuracy of Energy Meters		0.2S	Confirmed
2.6	System operation in all stable states	-	Yes	Confirmed
2.7	NAS devices shall have open architecture to connect them to others vendor's equipment	-	Yes	Confirmed
2.8	The control room system shall have the following provisions	-		Confirmed
	- Scaleable (for future extensions)	-	Yes	Confirmed
	- backward compatibilty & interoperability with other sub-system including multi-vendor platform	-	Yes	Confirmed
	- Ease of maintenance	-	Yes	Confirmed
	- Service availbility & adaptability for future technolgy developments	-	Yes	Confirmed
2.90	The overall control & monitoring system shall comply with IEC 60870-5 and interface with protection system at IEC 61850	-	Yes	Confirmed

14 CONTROL AND MONITORING SYSTEM

14.1 Guaranteed Technical Particulars

Item / Clause No.	Parameter	Unit	Requirement	Bidder's confirmation /seal / signature
2.10	The network equipment shall have a high level of security features in order to prevent any kind of external intrusion / hacking event into system	-	Yes	Confirmed
2.11	The control system shall have both physical & functional or operational redundancies	-	Yes	Confirmed
2.12	All necessary works including supply / laying of OFC & fibre splicing / terminations at the pothead yard / PH control room / Dam control room/route survey are included	-	Yes	Confirmed
3	Characterstic Data			
3.1	Number of local Control Boards	-	As per PTS clause no. 14.1.1	Confirmed
3.1.1	Type of interfaces / ports provided at Local Control Boards for connection with mobile engineering stations	-	Yes	Confirmed
3.2	Human Machine Interface - operator panels	-	Yes	Confirmed
3.3	Number of various operating desks to be provided in the Central Control Room with all necessary accessories	Nos.	as per PTS clause no. 14.1.2	Confirmed
3.4	Optical Fiber			
3.4.1	Type of Laying	-	As per PTS Cl. No. 14.1.4, 14.1.5 & 14.1.6	Confirmed
3.4.2	Optical Fiber core/cladding diameter	µm/µm	As per IEC 60793	Confirmed
3.4.3	Type of cable used within power house	-	DWMM	Confirmed
3.4.4	Type of optical fibre used between P/H & administrative building	-	ADSS ,DWSM (12 cores)	Confirmed
3.4.5	Type of cable used between power house of Uri I Stg 2 and And Uri I Stg I	-	ADSS,DWSM(12 cores)	Confirmed
3.4.6	Number of cores for optical fibre cable provided for communication between power house of Uri I Stg 2 and And Uri I Stg I	Nos.	12	Confirmed
3.5	Type of communication ports	-	Serial ethernet / parallel	Confirmed
3.6	Method of clock synchronization with GPS clock reference	IRIG-B / PPM etc	IRIG-B/SNTP/RS232/PPM/PPS	Confirmed
3.7	Large Screen Display			
3.7.1	Type	-	LED	Confirmed

14 CONTROL AND MONITORING SYSTEM

14.1 Guaranteed Technical Particulars

Item / Clause No.	Parameter	Unit	Requirement	Bidder's confirmation /seal / signature
3.7.2	Diagonal length of Large Screen Display	Inches	Large Screen LED wall Display of size 162" diagonal with display wall controller	Confirmed
3.7.3	Screen Resolution of LSD	pixels	3840 X 2160	Confirmed
3.7.4	Display Controller provided with software	-	Yes	Confirmed
3.8	NAS & Storage media provided for archival purposes	-	As per PTS Cl. No. 14.1.2 (xi),	Confirmed
3.9	Networks of the Control System			
3.9.1	Power house LAN			
3.9.1.1	- Type	-	Ethernet	Confirmed
3.9.1.2	- Data transfer rate	Gbps	1Gbps	Confirmed
3.9.2	Control Room Network			
3.9.2.1	- Data transfer rate	Gbps	1Gbps	Confirmed
3.9.3	Plant Control Network			
3.9.3.1	- Type	-	Fiber Optic	Confirmed
3.9.3.2	- Data transfer rate	Gbps	1Gbps	Confirmed
3.10	GPS system provided	-	Yes	Confirmed
3.11	Protection class of panel enclosures (IP class)	-	IP 52	Confirmed
3.12	Compliance of latest standards as per PTS clause no. 14.5.1	-	Yes	Confirmed
4	Complete Compliance of Specification	-	Yes	Confirmed

23 ELECTRIC OVERHEAD TRAVELLING (EOT) CRANES

23.1 Guaranteed Technical Particulars

Item / Clause No.	Parameter	Unit	Requirement	Bidder's confirmation / seal / signature
A.				
1	**Power House EOT crane**			
1.1	Type	-	Electrical Overhead Double Girder	Confirmed
1.2	Number of cranes	Nos.	2	Confirmed
1.3	Duty class of cranes	-	M3	Confirmed
1.4	Rated capacity of			
1.4.1	Main hoist	tonnes	150	Confirmed
1.4.2	Auxilliary hoist	tonnes	25	Confirmed
1.4.3	Monorail hoist	tonnes	15	Confirmed
1.5	Crane span (centre to centre of rails)	m	18.8 (approx.)	Confirmed
1.6	Runway length	m	140 (approx.)	Confirmed
1.7	Total lift (with load) of :			
1.7.1	Main hook	m	Not less than 27	Confirmed
1.7.2	Auxiliary hook	m	Not less than 43	Confirmed
1.7.3	Monorail hook	m	Not less than 43	Confirmed
1.8	Applicable Standards	-	IS:3177-1999, IS:807-1984	Confirmed
1.9	Adequacy of Crane capacity as 220Ton for lifting any heaviest/ biggest assembly of Turbine/ Generator	-	Yes	Confirmed
1.10	Factor of safety for			
	- Crane structure	-	As per IS 3177	Confirmed
	- wire rope	-	Not less than 6	Confirmed
	- Crane mechanism	-	As per IS 3177	Confirmed
	- Rope drum	-	Not less than 5	Confirmed
1.11	Maximum operating speeds (at rated load)			
1.11.1	bridge travel (long)	m/min.	Not more than 25	Confirmed
1.11.2	trolley travel (cross)	m/min.	Not more than 15	Confirmed
1.11.3	Main hoist lift / lower	m/min.	Not more than 1.2	Confirmed
1.11.4	Auxiliary hoist lift / lower	m/min.	Not more than 8	Confirmed
1.11.5	Monorail Hoist lift/lower	m/min.	Not more than 8	Confirmed
1.12	Acceleration / deceleration			
1.12.1	bridge travel	m/sec^2	0.10	Confirmed

23 ELECTRIC OVERHEAD TRAVELLING (EOT) CRANES

23.1 Guaranteed Technical Particulars

Item / Clause No.	Parameter	Unit	Requirement	Bidder's confirmation / seal / signature
1.12.2	trolley travel	m/sec^2	0.08	Confirmed
1.13	Maximum vertical deflection of bridge girder at rated load including dead load	mm	Span/1000	Confirmed
1.14	Speed Regulation	-	5% to 100%	Confirmed
1.14.1	Steps of controller	-	Not less than 6	Confirmed
1.15	Minimum Incremental Movement of			
1.15.1	Main hoist	mm	Not more than 1.5	Confirmed
1.15.2	Auxiliary hoist	mm	Not more than 1.5	Confirmed
1.15.3	Bridge Travel	mm	Not more than 3	Confirmed
1.15.4	Trolley Travel	mm	Not more than 3	Confirmed
1.15.5	Monorail travel	mm	Not more than 5	Confirmed
1.16	Crane motors			
1.16.1	Drive	-	VVVF	Confirmed
1.16.2	Insulation class and protection class	-	F, IP55	Confirmed
1.16.3	Duty factor of motor for normal speed	-	40%	Confirmed
1.17	Maximum distance between bottom of gantry rail and the highest point of the crane	mm	Not more than 5000	Confirmed
1.18	Terminal position of			
1.18.1	Main hook from centre of gantry rail on			
	- Upstream side	mm	1900	Confirmed
	- Downstream side	mm	2300	Confirmed
1.18.2	Auxiliary hook from centre of gantry rail on			
	- Upstream side	mm	2500	Confirmed
	- Downstream side	mm	1500	Confirmed
1.18.3	Monorail hook from centre of gantry rail on			
	- Upstream side	mm	2000	Confirmed
	- Downstream side	mm	2000	Confirmed
1.18.4	Main hook from inner edge of wall at			
	- service bay wall	mm	3500	Confirmed
	- other end	mm	3500	Confirmed
1.18.5	Auxiliary hook from inner edge of wall at			
	- service bay wall	mm	3500	Confirmed
	- other end	mm	3500	Confirmed
1.19	Type of brakes for			
1.19.1	LT travel	-	DCEM + EHT	Confirmed
1.19.2	CT travel	-	DCEM + EHT	Confirmed
1.19.3	Main hoist	-	DCEM + EHT	Confirmed
1.19.4	Auxilary hoist	-	DCEM + EHT	Confirmed
1.19.5	Mono-rail hoist	-	EHT	Confirmed

23 ELECTRIC OVERHEAD TRAVELLING (EOT) CRANES

23.1 Guaranteed Technical Particulars

Item / Clause No.	Parameter	Unit	Requirement	Bidder's confirmation / seal / signature
1.19.6	Monorail cross travel	-	AC/DC EM	Confirmed
1.20	EOT crane(s) to be handed over with last generating unit & maintained by Contractor	-	Yes	Confirmed
1.21	EOT crane(s) to be operated with power cables till DSL is in place and charged	-	Yes	Confirmed
1.22	DSL conductor material	-	Copper	Confirmed
2	**GIS Building EOT crane**			
2.1	Type	-	Electrical Overhead single Girder	Confirmed
2.2	Number of cranes	Nos.	1	Confirmed
2.3	Duty class of cranes	-	M3	Confirmed
2.4	Rated capacity of hoist	tonnes	10	Confirmed
2.5	Crane span (centre to centre of rails)	m	15.75 (approx.)	Confirmed
2.6	Runway length	m	105 (approx.)	Confirmed
2.7	Total lift of hook	m	Not less than 21 m (approx.)	Confirmed
2.8	Operating speed for hook lift / lower	m/min.	1.2	Confirmed
2.9	Maximum vertical deflection of bridge girder at rated load including dead load	mm	Span/1000	Confirmed
2.1	Speed Regulation	-	5% to 100%	Confirmed
2.11	Crane motors			
2.11.1	Drive	-	VVVF	Confirmed
2.11.2	Insulation class and protection class	-	F, IP55	Confirmed
2.11.3	Relative duty factor of motor for normal speed	-	40%	Confirmed
2.12	Type of brakes for	-		
2.12.1	LT travel	-	DCEM + EHT	Confirmed
2.12.2	CT travel	-	DCEM + EHT	Confirmed
2.12.3	Main hoist	-	DCEM + EHT	Confirmed
2.13	DSL conductor material	-	Copper	Confirmed

24 COOLING WATER SYSTEM

24.1 Guaranteed Technical Particulars

Item / Clause No.	Parameter	Unit	Requirement	Bidder's confirmation / seal / signature
A	**Primary cooling water circuit**			
1	**Primary cooling water pumps**			
1.1	Type	-	Vertical Inline pump	Confirmed
1.2	Pumping capacity at maximum continuous rating (MCR)	lpm	As per the requirement and approval during detailed engineering	Confirmed
1.3	Total Number of pumps	Nos.	As per PTS clause no.24.1.1	Confirmed
1.4	Duty of pumps	-	Continuous	Confirmed
1.5	Insulation class of pump-motors	-	F (temperature rise limited to B)	Confirmed
2	**Automatic Inline Filter**			
2.1	Type	-	SS perforated element	Confirmed
2.2	Total number	Nos.	As per PTS clause no.24.1.1	Confirmed
2.3	Design head	m	As per the requirement and approval during detailed engineering	Confirmed
2.4	Water flow rate at design head and at maximum continuous rating	Lpm	As per the requirement and approval during detailed engineering	Confirmed
2.5	Cleaning effectiveness, particulate matter down to	microns	2000	Confirmed
3	**Automatic self cleaning filter**			
3.1	Type	-	Wedge wire type	Confirmed
3.2	Total number	Nos.	As per PTS clause no.24.1.1	Confirmed
3.3	Design head	m	As per the requirement and approval during detailed engineering	Confirmed

24 COOLING WATER SYSTEM

24.1 Guaranteed Technical Particulars

Item / Clause No.	Parameter	Unit	Requirement	Bidder's confirmation / seal / signature
3.4	Water flow rate at design head and at maximum continuous rating	Lpm	As per the requirement and approval during detailed engineering	Confirmed
3.5	Cleaning effectiveness, particulate matter down to	microns	1000	Confirmed
4	**Plate type heat exchanger**			
4.1	Type	-	Wide gap plate type	Confirmed
4.2	Total number	nos.	as per PTS clause no.24.1.1	Confirmed
4.3	Primary system water temperature			Confirmed
4.4	-inlet(maximum)	°C	22	Confirmed
4.5	-outlet (maximum)	°C	27	Confirmed
4.6	Secondary system water temperature			Confirmed
4.7	-inlet (maximum)	°C	As per the requirement and approval during detailed engineering	Confirmed
4.8	-outlet (maximum)	°C		Confirmed
4.9	Minimum thickness of plate	mm	0.8	Confirmed
B	**Secondary cooling water circuit**			
1	**Secondary cooling water pumps**			
1.1	Type	-	Vertical Inline pump	Confirmed
1.2	Pumping capacity at maximum continuous rating (MCR)	lpm	As per the requirement and approval during detailed engineering	Confirmed
1.3	Number of pumps	Nos.	as per PTS clause no.24.1.1	Confirmed
1.4	Duty of pumps	-	Continuous	Confirmed
1.5	Insulation class of pump-motors	-	F (temperature rise limited to B)	Confirmed
2	**Automatic self cleaning filter**			
2.1	Type	-	Wedge wire type	Confirmed
2.2	Total number	Nos.	As per PTS clause no.24.1.1	Confirmed

24 COOLING WATER SYSTEM

24.1 Guaranteed Technical Particulars

Item / Clause No.	Parameter	Unit	Requirement	Bidder's confirmation / seal / signature
2.3	Design head	m	As per the requirement and approval during detailed engineering	Confirmed
2.4	Water flow rate at design head and at maximum continuous rating	lpm	As per the requirement and approval during detailed engineering	Confirmed
2.5	Cleaning effectiveness, particulate matter down to	microns	Upto 100	Confirmed
C	**Shaft seal clean water supply circuit**			
1	**Shaft sealing cooling water pumps**			
1.1	Type	-	Horizontal centrifugal	Confirmed
1.2	Pumping capacity at maximum continuous rating (MCR)	lpm	As per the requirement and approval during detailed engineering	Confirmed
1.3	Number of pumps	Nos.	as per PTS clause no.24.1.1	Confirmed
1.4	Duty of pumps	-	Continuous	Confirmed
1.5	Insulation class of pump-motors	-	F (temperature rise limited to B)	Confirmed
2	**Automatic self cleaning filter**			Confirmed
2.1	Type	-	Wedge wire type	Confirmed
2.2	Total number	Nos.	as per PTS clause no.24.1.1	Confirmed
2.3	Cleaning effectiveness, particulate matter down to	microns	500	Confirmed
3	**Cyclone separators**			Confirmed
3.1	Type	-	Centrifugal type with automatic purging	Confirmed
3.2	Total number	Nos.	As per PTS clause no.24.1.1	Confirmed
3.3	Design head	m	As per the requirement and approval during detailed engineering	Confirmed

24 COOLING WATER SYSTEM

24.1 Guaranteed Technical Particulars

Item / Clause No.	Parameter	Unit	Requirement	Bidder's confirmation / seal / signature
3.4	Water flow rate at design head	lpm	As per the requirement and approval during detailed engineering	Confirmed
3.5	Cleaning effectiveness, particulate matter down to	microns	Upto 75/40	Confirmed
3.6	Filter cleaning effectiveness for the above	%	98	Confirmed
3.7	Whether bolting type lower and upper half of casing is provided	-	Yes	Confirmed
3.8	Whether neoprene rubber liner for purge valve provided	-	Yes	Confirmed
4	**Skid mounted self flushing candle type filters**			Confirmed
4.1	Type	-	Wedge wire type	Confirmed
4.2	Total number	Nos.	as per PTS clause no.24.1.1	Confirmed
4.3	Cleaning effectiveness, particulate matter down to	microns	50 micron or better	Confirmed
5	**Secondary system make up water tank for cooling**			Confirmed
5.1	Total numbers	nos.	1	Confirmed
5.2	Tank Capacity	litre	As per the requirement and approval during detailed engineering	Confirmed
5.3	Testing instrument for quality check of make-up water in the circuit	-	Yes	Confirmed
6	**Makeup clean water supply circuit**			Confirmed
6.1	**Automatic self-Cleaning filter**			Confirmed
6.1.1	Type	-	Wedge wire type	Confirmed
6.1.2	Total number	Nos.	As per PTS clause no.24.1.1	Confirmed
6.1.3	Design head	m	As per the requirement and approval during detailed engineering	Confirmed

24 COOLING WATER SYSTEM

24.1 Guaranteed Technical Particulars

Item / Clause No.	Parameter	Unit	Requirement	Bidder's confirmation / seal / signature
6.1.4	Water flow rate at design head and at maximum continuous rating	Lpm	As per the requirement and approval during detailed engineering	Confirmed
6.1.5	Cleaning effectiveness, particulate matter down to	micron	100 and above	Confirmed
D	**Reactor cooling water supply circuit**			
1	**Reactor cooling water pumps**			
1.1	Type	-	As per PTS clause no.24.1.1	Confirmed
1.2	Pumping capacity at maximum continuous rating (MCR)	lpm	As per the requirement and approval during detailed engineering	Confirmed
1.3	Total Number of pumps	Nos.	As per PTS clause no.24.1.1	Confirmed
1.4	Duty of pumps	-	Continuous	Confirmed
1.5	Insulation class of pump-motors	-	F (temperature rise limited to B)	Confirmed
2	**Automatic Inline Filter**			
2.1	Type	-	SS perforated element	Confirmed
2.2	Total number	Nos.	As per PTS clause no.24.1.1	Confirmed
2.3	Design head	m	As per the requirement and approval during detailed engineering	Confirmed
2.4	Water flow rate at design head and at maximum continuous rating	Lpm	As per the requirement and approval during detailed engineering	Confirmed
2.5	Cleaning effectiveness, particulate matter down to	microns	1000	Confirmed
3	**Cyclone separators**			Confirmed
3.1	Type	-	Centrifugal type with automatic purging	Confirmed

24 COOLING WATER SYSTEM

24.1 Guaranteed Technical Particulars

Item / Clause No.	Parameter	Unit	Requirement	Bidder's confirmation / seal / signature
3.2	Total number	Nos.	As per PTS clause no.24.1.1	Confirmed
3.3	Design head	m	As per the requirement and approval during detailed engineering	Confirmed
3.4	Water flow rate at design head	lpm	As per the requirement and approval during detailed engineering	Confirmed
3.5	Cleaning effectiveness, particulate matter down to	microns	Upto 75/40	Confirmed
3.6	Filter cleaning effectiveness for the above	%	98	Confirmed
3.7	Whether bolting type lower and upper half of casing is provided	-	Yes	Confirmed
3.8	Whether neoprene rubber liner for purge valve provided	-	Yes	Confirmed
E	**Material/ standard/ class/ grade/ type for**			Confirmed
1	**Cooling water pumps**			
1.1	Pump casing	-	Cast steel/grey cast iron	Confirmed
1.2	Pump impeller	-	stainless steel (AISI 316 or better)	Confirmed
2	**Automatic Inline Strainer**			Confirmed
2.1	Filter element	-	Stainless steel	Confirmed
2.2	Housing	-	Cast steel	Confirmed
3	**Automatic Self-cleaning strainer**			Confirmed
3.1	Filter element	-	Stainless steel	Confirmed
3.2	Housing	-	Cast steel	Confirmed
4	**Cyclone seperator housing**	-	Stainless steel (316 or better)	Confirmed
F	Cooling water system (open loop), shaft seal system, etc. should be capable of continuous working satisfatorly for upto & including (detailed as per enclosure-1) silt level	-	Yes	Confirmed
G	Compliance of latest standards as per PTS clause no. 24.5.1	-	Yes	Confirmed

24 COOLING WATER SYSTEM

24.1 Guaranteed Technical Particulars

Item / Clause No.	Parameter	Unit	Requirement	Bidder's confirmation / seal / signature
H	Complete Compliance of Specification	-	Yes	Confirmed

26 HEATING VENTILATION AND AIR CONDITIONING (HVAC) SYSTEM

26.1 Guaranteed Technical Particulars

Item / Clause No.	Parameter	Units	Requirement	Bidder's confirmation /seal / signature
1	**General**			
1.1	Type		Floor Mounted	Confirmed
2	**Fresh Air handling units (AHU) / Vertical Mounted AHU / ACU**			
2.1	Type		Double skinned	Confirmed
2.2	Cooling coil efficiency	%	minimum 90	Confirmed
2.3	Heating coil efficiency	%	minimum 85	Confirmed
2.4	Noise level	dB(A)	As per PTS Clause 26.3.4	Confirmed
2.5	Minimum air flow rate			
2.5.1	- AHU / ACU	CMH	To be decided during detailed engineering	Confirmed
2.6	Proportion of fresh air to recirculated air			Confirmed
2.6.1	- AHU / ACU	CMH	To be decided during detailed engineering	Confirmed
2.7	Maximum delivery head pressure(acc to system pressure drop)	Pa	To be decided during detailed engineering	Confirmed
2.8	Type of unit (Single / double skin)		Double skin	Confirmed
2.9	Fan section			
2.9.1	- Type		Backward Curved	Confirmed
2.9.2	- Number of fan & class of rating	Nos.	To be decided during detailed engineering	Confirmed
2.9.3	- Drive arrangement		V-belt	Confirmed
2.9.4	- Total air quantity	CMH	To be decided during detailed engineering	Confirmed
2.9.5	- Whether statically and dynamically balanced		Yes	Confirmed
3	**Water cooled Chiller Unit**			
3.1	Capacity of fully assembled chiller units at/No of units	TR	To be decided during detailed engineering	Confirmed
3.1.1	-Rated Load	TR		
3.1.2	-75% loading	TR		
3.1.3	-50% loading	TR		
3.2	Type/Designation		Water Cooled	Confirmed
3.3	Working pressure side in cooler	kg/cm^2	To be decided during detailed engineering	Confirmed
3.3.1	Maximum fluid side pressure in cooler	kg/cm^2		

26 HEATING VENTILATION AND AIR CONDITIONING (HVAC) SYSTEM

26.1 Guaranteed Technical Particulars

Item / Clause No.	Parameter	Units	Requirement	Bidder's confirmation /seal / signature
3.3.2	Refrigerant used		As per PTS clause 26.5.4.1	Confirmed
3.4	Overall size of each unit LxDxH		To be decided during detailed engineering	Confirmed
3.5	Noise level with measuring distance	dB(A)/ m	As per PTS Clause 26.3.4	Confirmed
3.6	Total input power at design condition	KW	To be decided during detailed engineering	Confirmed
3.7	Compressor			
3.7.1	- Type/designation		Centrifugal	Confirmed
3.8	Compressor Motor			
3.8.1	- Type/designation		Hermetic/semi-hermetic direct driven	Confirmed
3.8.2	- Class of insulation		To be decided during detailed engineering	Confirmed
3.8.3	- Class of protection			Confirmed
3.8.4	- Duty class of motor			Confirmed
3.8.5	- Minimum service factor			Confirmed
3.8.6	- Motor speed			Confirmed
3.8.7	- Type of start			Confirmed
3.9	Cooling coil			Confirmed
3.9.1	- Type/designation			Confirmed
3.9.2	Flow rate of water	lpm		Confirmed
3.9.3	Pressure drop in coil	mm of water		Confirmed
3.10	Condensor			Confirmed
3.10.1	- Working pressure of the coils	kg/cm^2		Confirmed
3.10.2	- Design pressure of the coils	kg/cm^2		Confirmed
3.11	Chiller			Confirmed
3.11.1	-Inlet temperature of raw water	°C		Confirmed
3.11.2	-Outlet temperature of raw water	°C		Confirmed
3.11.3	-Inlet temperature of secondary cooling water	°C		Confirmed
3.11.4	-Outlet temperature of secondary cooling water	°C		Confirmed
3.11.5	-Inlet temperature of chilled water	°C		Confirmed
3.11.6	-Outlet temperature of chilled water	°C		Confirmed
3.11.7	- Working pressure of the coils	kg/cm^2		Confirmed
3.11.8	- Design pressure of the coils	kg/cm^2		Confirmed

26 HEATING VENTILATION AND AIR CONDITIONING (HVAC) SYSTEM

26.1 Guaranteed Technical Particulars

Item / Clause No.	Parameter	Units	Requirement	Bidder's confirmation /seal / signature
4	**Air ducts**			
4.1	Maximum air velocities in ducts			Confirmed
4.2	In main ducts	m/ sec	as per PTS clause no.26.3.5	Confirmed
4.3	In branch ducts	m/ sec		Confirmed
4.4	In occupied room zones	m/ sec		Confirmed
4.5	Noise level of fans	dB(A)/ m	As per PTS Clause 26.3.4	Confirmed
4.6	Duct insulation thickness for supply, return and fresh air duct	mm	To be decided during detailed engineering	Confirmed
5	**AHU Fan Motors**			
5.1	Motor Speed	rpm	1450/1500	Confirmed
6	**Air Filters**			
6.1	Type		V-fold HDPE(High density Polythylene) supported by Aluminium wire mesh with water as the mode of cleaning medium	Confirmed
6.2	Rated flow	m^3/min	55	Confirmed
6.3	Face velocity	m/min	150	Confirmed
7	**Humidification Package**			
7.1	Type/ designation		Pan type	Confirmed
8	**Exaust Fans**			
8.1	Type		Adjustable axial flow fans	Confirmed
8.2	Number of fans, blades/vanes of each type	Nos.	Total nos. to be decided during detailed engineering	Confirmed
8.3	Air quantity of each type of fans	m^3/min	To be decided during detailed engineering	Confirmed
8.4	Noise Level	dB(A)	As per PTS Clause 26.3.4	Confirmed
9	**Air conditioner for DG building**			
9.1	Type		Split type	Confirmed
9.2	No. of units	Nos.	As per PTS Clause 26.1.4	Confirmed

26 HEATING VENTILATION AND AIR CONDITIONING (HVAC) SYSTEM

26.1 Guaranteed Technical Particulars

Item / Clause No.	Parameter	Units	Requirement	Bidder's confirmation /seal / signature
9.3	Each Capacity	TR	To be decided during detailed engineering	Confirmed
9.4	Noise level	dB(A)/ m	As per PTS Clause 26.3.4	Confirmed
10	**Fire/Smoke Dampers**			
10.1	Type		Multi blade motorised operated type	Confirmed
11	**Electrical Controls**			
11.1	Type		Fully automatic mode and manual mode	Confirmed
11.2	Three way mixing valve for AHUs		Yes	Confirmed
11.3	Motorise valve for fan cooling unit and water cooled pacakged AC		Yes	Confirmed
11.4	Thermostat for AHU and FCU, ACU		Yes	Confirmed
11.5	Automatic control for dampers		Yes	Confirmed
12	**Cooling water circuit**			
12.1	**Open loop raw water cooling water pump**			
12.1.1	-Type		Horizontal centrifugal	Confirmed
12.1.2	-Number of pumps	Nos.	As per PTS Clause 26.1.5	Confirmed
12.1.3	-Pumping capacity	Lpm	To be decided during detailed engineering	Confirmed
12.2	**Secondary cooling water pump**			
12.2.1	-Type		Horizontal Centrifugal pumps	Confirmed
12.2.2	-Number of pumps	Nos.	As per PTS Clause 26.1.5	Confirmed
12.2.3	-Pumping capacity	Lpm	To be decided during detailed engineering	Confirmed
12.3	**Chilled water pump**			
12.3.1	-Type		Horizontal Centrifugal pumps	Confirmed
12.3.2	-Number of pumps	Nos.	As per PTS Clause 26.1.5	Confirmed
12.3.3	-Pumping capacity	Lpm	To be decided during detailed engineering	Confirmed

26 HEATING VENTILATION AND AIR CONDITIONING (HVAC) SYSTEM

26.1 Guaranteed Technical Particulars

Item / Clause No.	Parameter	Units	Requirement	Bidder's confirmation /seal / signature
12.4	**Automatic Inline filter**			
12.4.1	Type	-	Perforated type	Confirmed
12.4.2	Total number	Nos.	As per PTS clause no.26.1.5	Confirmed
12.4.3	Cleaning effectiveness, particulate matter down to	microns	2000 microns in primary filter	Confirmed
12.5	**Automatic self cleaning Simplex filter**			
12.5.1	Type	-	Wedge wire type	Confirmed
12.5.2	Total number	Nos.	As per PTS clause no.26.1.5	Confirmed
12.5.3	Cleaning effectiveness, particulate matter down to	microns	1000 / 100 microns	Confirmed

Attachment 4_Technical_D_Amendment_01

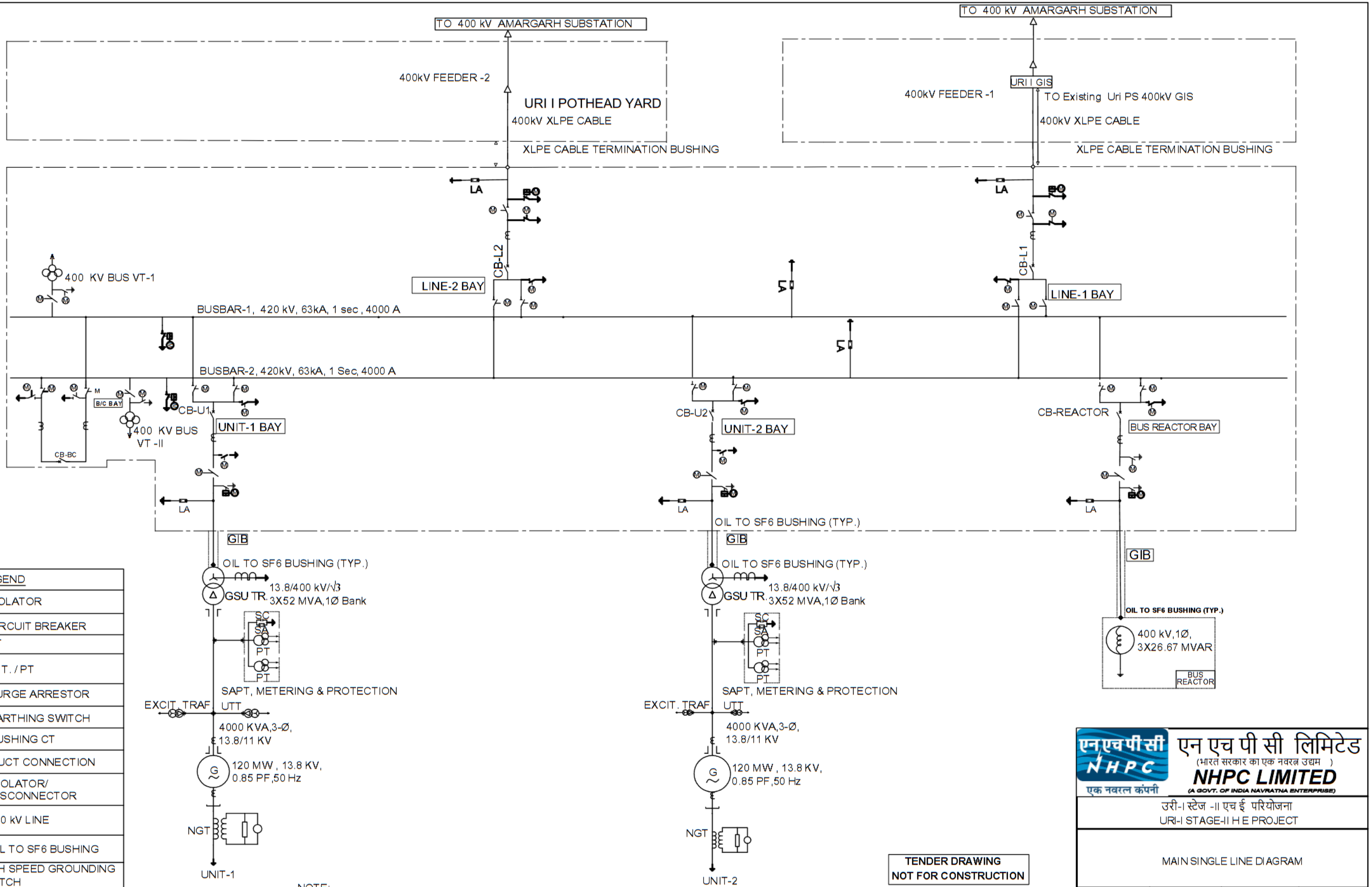

LEGEND	
	ISOLATOR
	CIRCUIT BREAKER
	CT
	V. T. / PT
	SURGE ARRESTOR
	EARTHING SWITCH
	BUSHING CT
	DUCT CONNECTION
	ISOLATOR/ DISCONNECTOR
	400 kV LINE
	OIL TO SF6 BUSHING
	HIGH SPEED GROUNDING SWITCH

NOTE:-
1. NO. AND RATINGS OF FEEDERS ARE INDICATIVE ONLY AND SHALL BE DECIDED DURING DETAIL ENGINEERING AFTER AWARD.

TENDER DRAWING
NOT FOR CONSTRUCTION

एन एच पी सी लिमिटेड
(भारत सरकार का एक नवरत्न उद्यम)
NHPC LIMITED
(A GOVT. OF INDIA NAVRATNA ENTERPRISE)
एक नवरत्न कंपनी

उरी-I स्टेज -II एच ई परियोजना
URI-I STAGE-II H E PROJECT

MAIN SINGLE LINE DIAGRAM

DRAWN	SUBMITTED	RECOMMENDED	APPROVED
AJAY KUMAR	NAUSHAD HAROON	S. R. NAIDU	LAKESH KUMAR

DATE	DRG. NO.						
JUN- 2026	NH	DEM	URI-I	STG-II	SLD	01	00

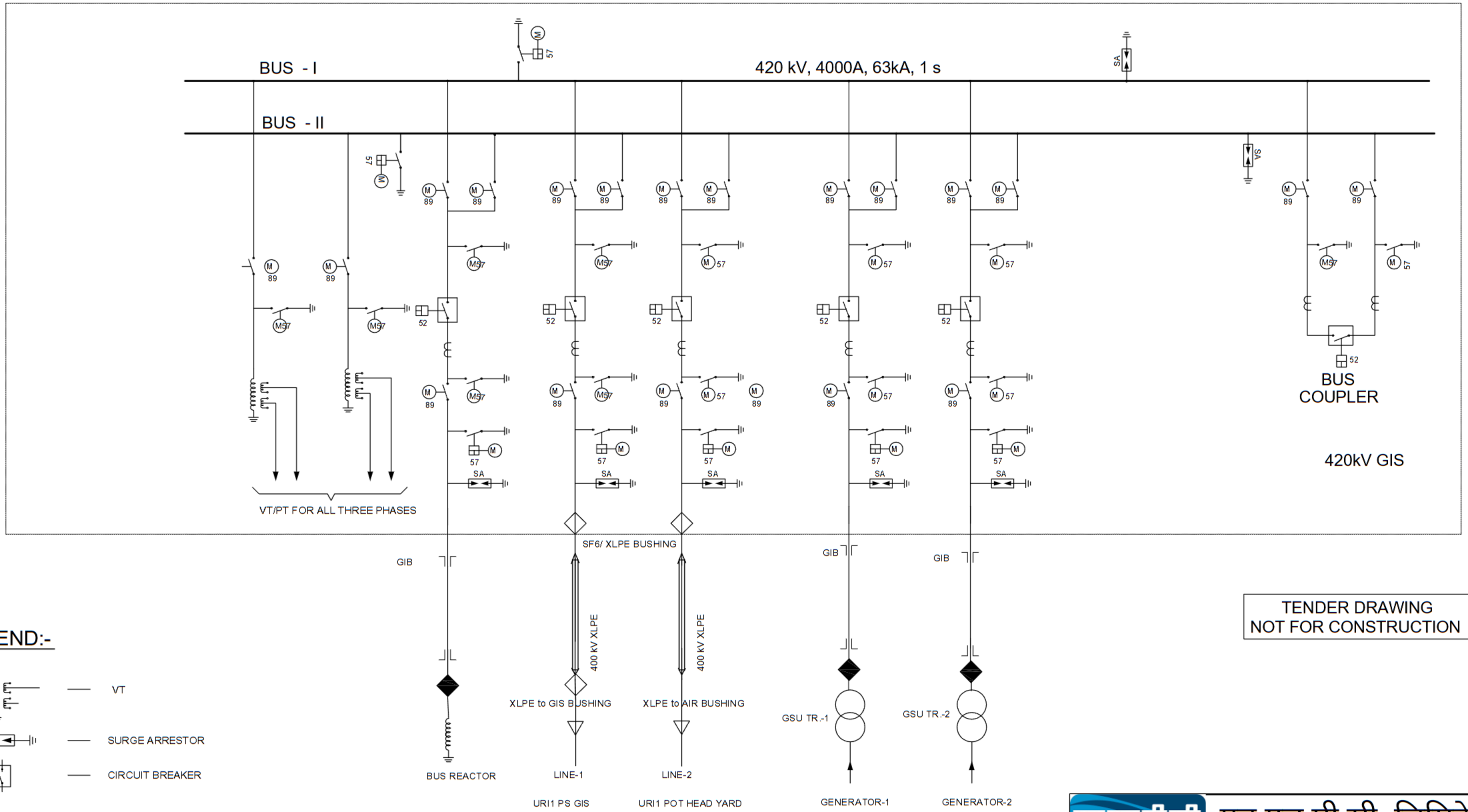

TENDER DRAWING
NOT FOR CONSTRUCTION

LEGEND:-

- VT
- SURGE ARRESTOR
- CIRCUIT BREAKER (52)
- HIGH SPEED GROUNDING SWITCH (57 M)
- SAFETY GROUNDING SWITCH (57M)
- CURRENT TRANSFORMER
- ISOLATOR (M 89)
- OIL to SF6 BUSHING
- SF6 /XLPE BUSHING

एन एच पी सी लिमिटेड
(भारत सरकार का एक नवरत्न उद्यम)
NHPC LIMITED
(A GOVT. OF INDIA NAVRATNA ENTERPRISE)
एक नवरत्न कंपनी

उरी-I स्टेज -II एच ई परियोजना
URI-I STAGE-II H E PROJECT

GENERAL SINGLE LINE DIAGRAM FOR GIS

DRAWN	SUBMITTED	RECOMMENDED	APPROVED
AJAY KUMAR	NAUSHAD HAROON	S. R. NAIDU	LAKESH KUMAR

DATE	DRG. NO.	NH	DEM	URI-I	STG-II	SLD	02	00
JUN- 2026								

COOLING WATER SYSTEM

Make of water tank

RADAR TYPE LEVEL SENSOR

OVERFLOW

STORAGE TANK

FROM HVAC HEADER

For RO water / Drinking water / HVAC secondary cooling water

Discharge to Tail Pool of Unit #2

REACTOR COOLING

HVAC Suction header

Suction from HVAC header

Standby

Valve

Valve

Main

Drain

U#1

U#2

SHAFT SEAL CIRCUIT

TAIL POOL

Draft tube

UNIT - I
DRAFT
TUBE GATE

Compressed air purging line

Standby

Valve

Main

Supply for cooling
During synchronous mode

Turbine OPU

MIV OPU

TGB cooler

LGB cooler

TH&UGB cooler

Stator cooler

Vent Air replacement

TRANSF. COOLER

TAIL POOL

Draft tube

UNIT - II
DRAFT
TUBE GATE

Compressed air purging line

Standby

Valve

Main

Supply for cooling
During synchronous mode

Turbine OPU

MIV OPU

GB cooler

GB cooler

TH&UGB cooler

Stator cooler

TRANSF. COOLER

LEGEND

- CENTRIFUGAL PUMP
- Booster Pump
- GATE VALVE
- Butterfly Valve
- NON - RETURN VALVE
- HEAT EXCHANGER
- AUTOMATIC SELF CLEANING WEDGE WIRE FILTER
- MOTORIZED VALVE
- PRESSURE REDUCING VALVE
- CYCLONE SEPARATER
- SKID MOUNTING SELF FLUSHING CANDLE TYPE FILTER
- Globe Valve
- Normally closed
- Normally open
- Automatic Self Cleaning Filter
- Diphragm Valve
- Automatic Inline Filter
- Automatic Air clear/air vent valve
- For bearing cooler /OPU cooler (Typ.)
- Typical Drain Arrangement for Filters/separators/ Stariners/HE etc

NOTES

1. INSTRUMENTATION HAVE NOT BEEN SHOWN IN THE DRG. HOWEVER, THE SAME SHALL BE SUPPLIED IN LINE WITH TECH. SPEC.
2. BACK FLUSHING ARRANGEMENT TO BE FINALISED DURING DETAILED ENGINEERING.
3. INSTRUMENTATION SHALL BE PROVIDED WITH ISOLATING VALVE
4. TYPE OF VALVES ARE INDICATIVE ONLY AND SHALL BE FINALISED DURING DETAILED ENGINEERING.

TENDER DRAWING
NOT FOR CONSTRUCTION

एनएचपीसी NHPC एक नवरत्न कंपनी

एन एच पी सी लिमिटेड
(भारत सरकार का एक नवरत्न उद्यम)
NHPC LIMITED
(A GOVT. OF INDIA NAVRATNA ENTERPRISE)

उरी-I स्टेज -II जल विद्युत परियोजना
URI -I STG-II HYDRO ELECTRIC PROJECT

SINGLE LINE DIAGRAM FOR
COOLING WATER SYSTEM

DRAWN	SUBMITTED	RECOMMENDED	APPROVED
AJAY KUMAR	ANURAG SINGH	P RAMAV KUMAR	LAKESH KUMAR

DATE	DRG. NO.
JULY- 2026	NH/DEM/URI-I STG-II/CW/01

LEGEND:-

- MOTORIZED VALVE WITH MANUAL OVERIDE
- GATE VALVE
- NORMALY OPENED GATE VALVE
- NORMALY CLOSED GATE VALVE
- HAND OPERATED VALVE
- DIAPHRAGM VALVE
- NON - RETURN VALVE
- AUTOMATIC SELF CLEANING WEDGE WIRE FILTER
- MOTORIZED THREE WAY VALVE
- AHU — AIR HANDLING UNIT
- WCC — WATER COOLING CHILLER UNIT
- MOTORIZED WATER CIRCULATION PUMP
- SILT FLUSHING LINE
- AUTOMATIC INLINE FILTERS

NOTE:-

1. AHU's SHOWN ARE INDICATIVE ONLY
2. INSTRUMENTATION CONFIGRATION SHALL BE AS PER TECHNICAL SPECIFICATIONS.
3. INSTRUMENTATION SHALL BE PROVIDED WITH ISOLATING VALVE INCLUDING A TEST CONNECTION OF M20 x 1.5 mm.
4. BACK FLUSHING ARRANGEMENT TO BE FINALISED DURING DETAILED ENGINEERING.
5. ANY OTHER EQUIPMENTS/DEVICES/HEADERS/INSTRUMEMENTATION ETC REQUIRED TO ACHIVE DESIRED PARAMETERS, SHALL BE IN THE SCOPE OF CONTRACTOR.
6. ADDITIONAL SILT FLUSHING LINE WITH GATE VALVE FOR FILTERS, HEAT EXCHANGER ETC SHALL BE PROVIDED.

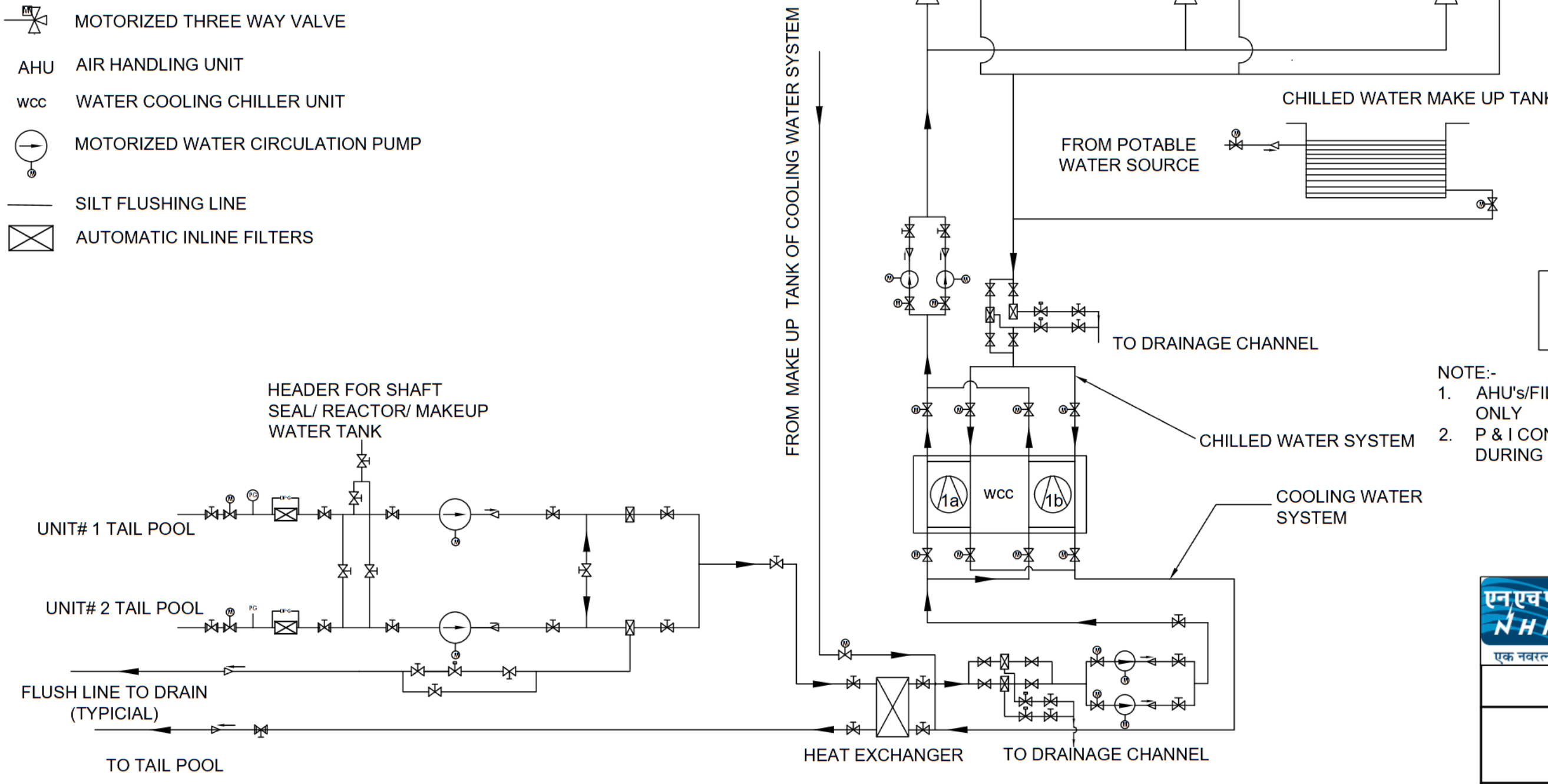

TENDER DRAWING
NOT FOR CONSTRUCTION

NOTE:-

1. AHU's/FILTERs SHOWN ARE INDICATIVE ONLY
2. P & I CONFIGURATION SHALL BE FINALISED DURING ENGINEERING

एन एच पी सी लिमिटेड
(भारत सरकार का एक नवरत्न उद्यम)
NHPC LIMITED
(A GOVT. OF INDIA NAVRATNA ENTERPRISE)
एक नवरत्न कंपनी

उरी-I स्टेज -II जल विद्युत परियोजना
URI-I STAGE-II H.E. PROJECT

HVAC SYSTEM
CHILLED WATER FOR VENTILATION SYSTEM

DRAWN	SUBMITTED	RECOMMENDED	APPROVED
AJAY KUMAR	PRANAV KUMAR	ASHISH KUMAR JHA	LAKESH KUMAR
DATE: JULY- 2026	DRG. NO.	NH/DEM/URI-I STG-II/AC/02/00	

FOR OFFICES / STORE AND
CABLE SPREADING ROOM / CABLE TRAYS

FIRE FIGHTING TANK

RADAR TYPE LEVEL SENSOR

GUIDED RADAR TYPE LEVEL SENSOR

LI LS LT LT LS LI

HL HL

FIRE FIGHTING
STORAGE TANK

LL LL

VLL VLL

VISUAL

OVERFLOW

TO DRAIN

OVERFLOW

TO DRAIN

MAKE WATER
TANK

BOREWELL

TAPPING FROM TRT
UNIT # 1

TAPPING FROM TRT
UNIT # 2

DRAINAGE GALLERY/TRENCH
(TYPICAL)

CABLE TUNNEL

BULK OIL
STORAGE TANK

UNIT-1 UNIT-2

MIV OPU MIV OPU

SHAFT SEAL FEEDER

MIV CAVERN

CONTROL BLOCK

TO MAKE WATER TANK

GIS HALL

MACHINE HALL

GOVERNOR OPU GOVERNOR OPU

UNIT-1 UNIT-2

Generator floor

Turbine floor

FLOOR / RUNNER
REMOVEL FLOOR

TRANSFORMER CAVERN

BUS REACTOR

I/C CABLE GALLERY

LEGEND:-

- NORMALLY OPEN VALVE
- NORMALLY CLOSED VALVE
- MOTORIZED VALVE WITH MANUAL OVER RIDE
- GATE VALVE
- HAND OPERATED BUTTERFLY VALVE
- CHECK VALVE
- LS — LEVEL SWITCH
- MOTORISED WATER CIRCULATION PUMP
- AUTOMATIC SAELF CLEANING SIMPLEX STRAINER
- WET SPRINKLER SYSTEM
- DELUGE SYSTEM
- VALVE WITH COUPLING (HYDRANT)
- PRESSURE SAFETY VALVE
- INLINE FILTER
- RADAR TYPE LEVEL SENSOR
- PG — PRESSURE GAUGE
- FM — FLOW METER
- LS — LEVEL SWITCH
- LI — LEVEL INDICATOR
- LT — LEVEL TRANSMETER(RADAR TYPE)
- PT — PRESSURE TRANSMITER
- PRESSURE REDUCING VALVE
- SILT FLUSHING LINE
- DIAPHRAGM VALVE

TENDER DRAWING
NOT FOR CONSTRUCTION

एन एच पी सी लिमिटेड
(भारत सरकार का एक नवरत्न उद्यम)
NHPC LIMITED
(A GOVT. OF INDIA NAVRATNA ENTERPRISE)
एक नवरत्न कंपनी

उरी-I स्टेज -II जल विद्युत परियोजना
URI -I STG-II HYDRO ELECTRIC PROJECT

FIRE FIGHTING SYSTEM

DRAWN	SUBMITTED	RECOMMENDED	APPROVED
AJAY KUMAR	ANURAG SINGH	PRANAV KUMAR	LAKESH KUMAR
DATE: JULY- 2026	DRG. NO.	NH/DEM/URI-I STG-II/FF/01	

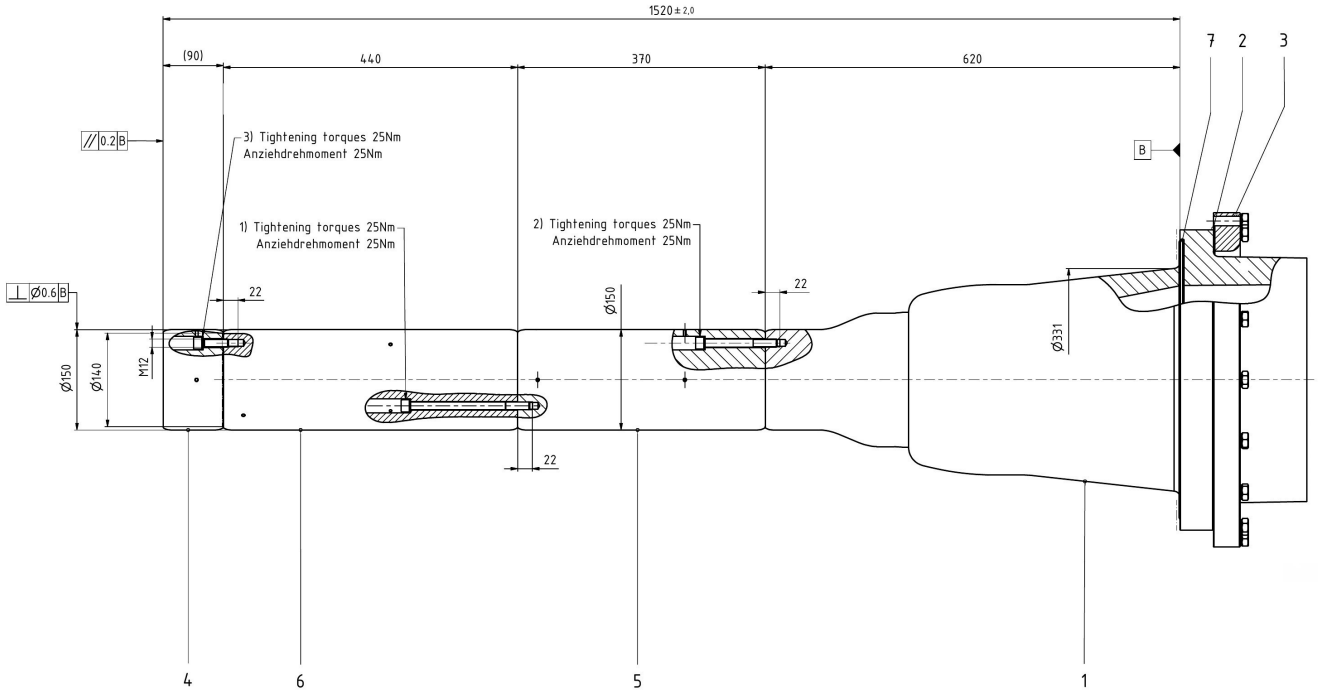
1520 ± 2,0
(90)
440
370
620
7
2
3
0.2 B
3) Tightening torques 25Nm
Anziehdrehmoment 25Nm
1) Tightening torques 25Nm
Anziehdrehmoment 25Nm
2) Tightening torques 25Nm
Anziehdrehmoment 25Nm
B
Ø0.6 B
22
22
22
Ø150
Ø140
M12
Ø150
Ø331
4
6
5
1

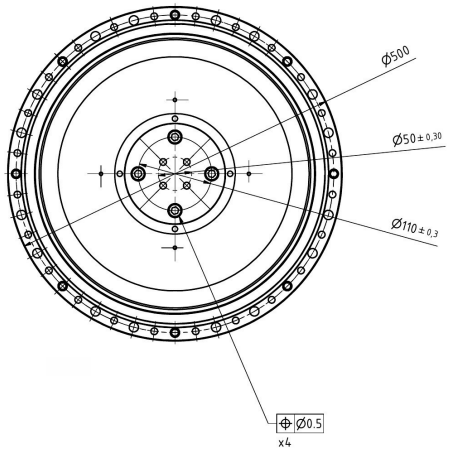
Ø500
Ø50 ± 0,30
Ø110 ± 0,3
Ø0.5
x4

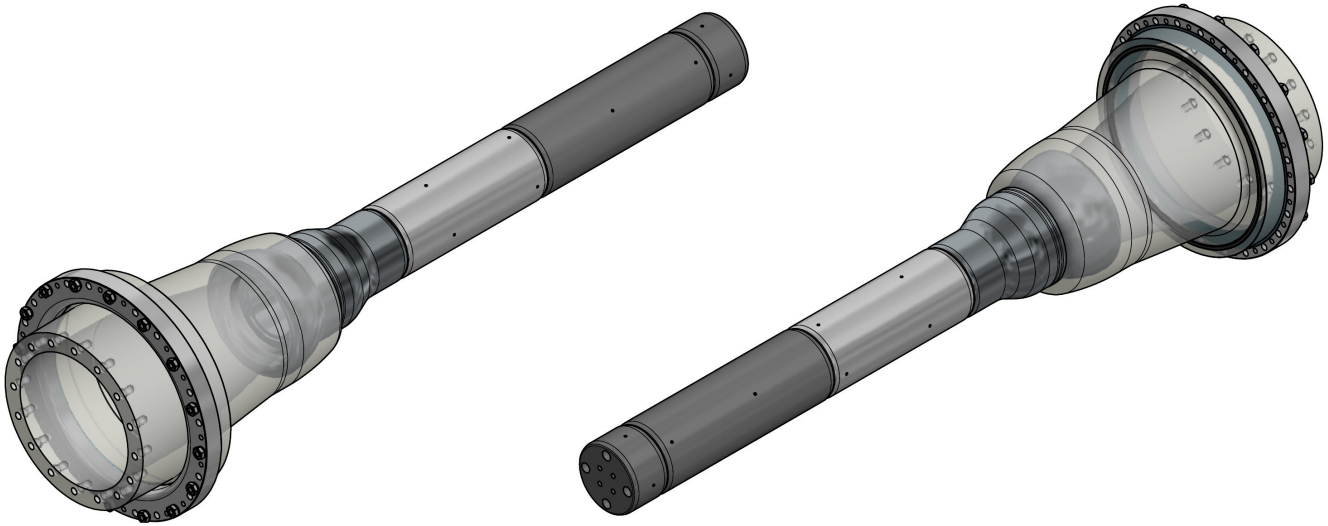

A–A

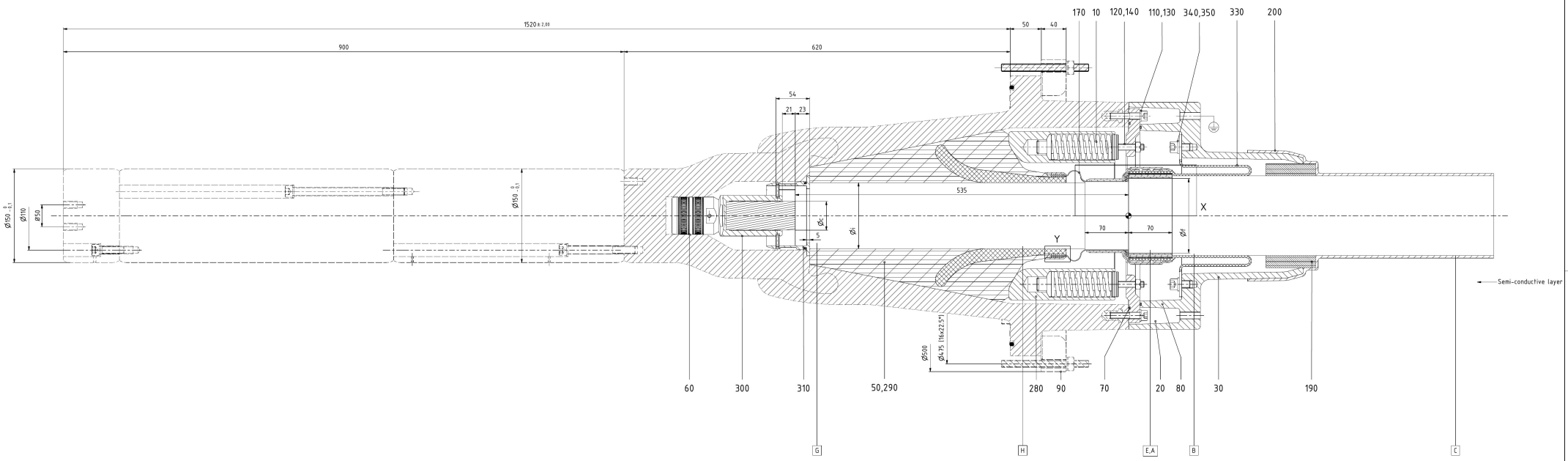

Area X

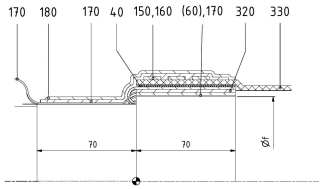

Al laminated sheath with Cu wires
XDRCU-ALT

Y (2 : 1)

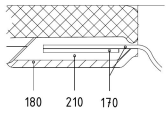

B–B (1 : 1)

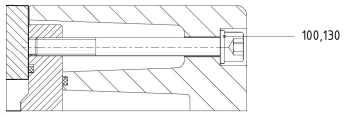

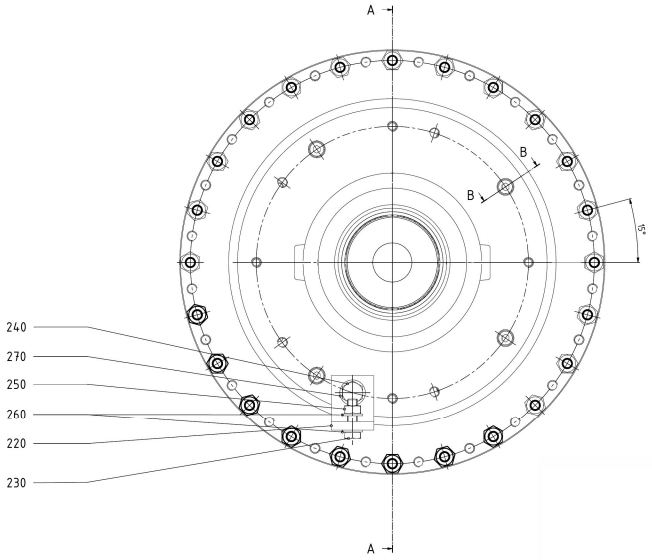

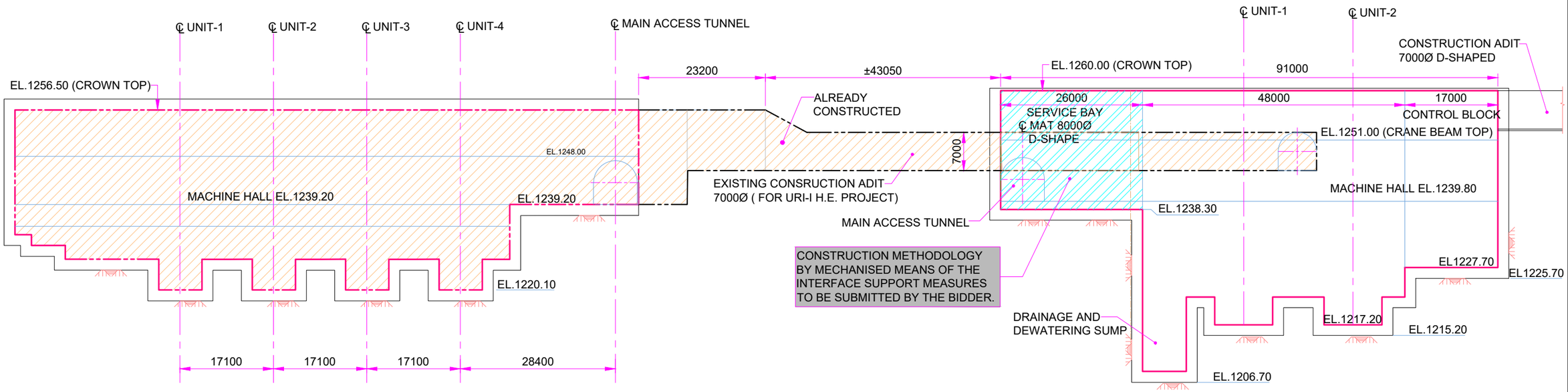

LONGITUDINAL SECTION THROUGH CENTER LINE OF MACHINE

(URI-I H.E. PROJECT ALREADY CONSTRUCTED)

(DRAINAGE & DEWATERING SUMP NOT SHOWN)

LONGITUDINAL SECTION THROUGH CENTER LINE OF MACHINE

(URI-1 STAGE- II H.E. PROJECT PROPOSED)

TENDER DRAWING
NOT FOR CONSTRUCTION

0 7.5 15 22.5 30 37.5 M.

(SCALE 1:750)

NOTES:-

1 ALL DIMENSIONS ARE IN MILIMETRES AND LEVELS ARE IN METRES.

2 VARIOUS SIZE AND LEVELS HAVE BEEN INCORPORATED IN THE DRAWING WHICH MAY BE MODIFIED DURING DETAILED DESIGN .

DATE	NO.	REVISION OR ISSUES	BY.	CH.	APP
		ISSUED FOR TENDER			

DESIGN MEMO NO. डिजाइन मेमो संख्या

एन एच पी सी लिमिटेड (भारत सरकार का उद्यम) NHPC Limited (A GOVT. OF INDIA ENTERPRISE) — A Navratna Company

उरी। द्वितीय चरण जल विद्युत परियोजना (जम्मू एण्ड कश्मीर)
URI-I STAGE-II HYDROELECTRIC PROJECT (J&K)

POWER HOUSE AREA
GENERAL ARRANGEMENT
COMBIND SECTIONS

DRAWN उद्रेखित	SUBMITTED प्रस्तुत	RECOMMENDED अनुशंसित		APPROVED अनुमोदन
S.TANWAR	S.TANWAR	VINOD. K		SAKET KUMAR

DATE दिनांक MARCH,2025 | DRG. NO. उद्रेख संख्या | NHUR-I(II) | 4CT1 | 41 | GA | 052 | 00

DRG. NO. NHUR-I(II) -4CT1 - 41 - GA - 052 - 00

ATTACHMENT-5A

A: LIST OF APPROVED SUBCONTRACTORS/VENDORS

S. No.	Items of Facilities	Names of Vendors
27.7	CHILLER	YORK CARRIER BLUESTAR TRANE VOLTAS KIRLOSKAR

Description of Work: Lot-III: Electro-mechanical works package of 240 MW (2X120MW) Uri-I Stage-II H.E Project, Baramulla District of UT of J&K, India
Tender ID.: 2026_ NHPC_906114_1

Technical_Q_Amendment_01

Sr. No.	Volume / Clause No. & Name / Page No.	Existing Clause of MQAP/QTS	Modified Clause
	Quality Test specification (QTS)		
1	Volume- III D Quality Test specification (QTS) Clauses, 1.3.4.1, Parts Exposed to Hydraulic Pressure, PDF Page: 9 of 304	The hydraulic test pressure shall be l.5 times the maximum operating pressure (except for spiral distributor) and shall be maintained for a period of eight hours or longer if required by the applicable standards.	The hydraulic test pressure shall be applied and maintained as per applicable standard/ approved drawing.
2	Volume- III D (QTS) Turbine & Accessories, 2.3.2 C, Heating run test, PDF Page: 18 of 304	Heat run test shall be undertaken at full load if load rejection at 75% of rated power has been successfully performed.	Heat run test shall be undertaken at full load after load rejection at 100% of rated power
3	Volume- III D (QTS) Cooling water system, 24.3, Field Test, PDF Page: 59 of 304	Operational Test on Pump-Motor Assembly for measurement of Head, Rate of Flow, Speed & Power Input .	Functional test / Run test of Pumps with complete setup to be performed at site.
4	Volume- III D (QTS) Drainage & Dewatering system, 25.3, Field Test, PDF Page: 61 of 304	Operational Test on Pump-Motor Assembly for measurement of Head, Rate of Flow, Speed & Power Input .	Functional test / Run test of Pumps with complete setup to be performed at site.
	Model Quality assurance plan (MQAP)		
5	Volume- III D Model Quality assurance plan (MQAP) Generator & Accessories-Generator - Stator Punching, PDF Page: 111 of 304	A Raw Material (CRNGO) ii) Stacking factor,Specific Total Loss, Magnetic Polarization, Quantum of Checks-Sample Plan,Record Format-JIR,Remarks-CHP	A Raw Material (CRNGO) ii) Stacking factor,Specific Total Loss, Magnetic Polarization, Quantum of Checks-Sample Plan,Record Format-TC,Remarks-TC
6	Volume- III D Model Quality assurance plan (MQAP) Generator & Accessories, B . i) & ii), Generator- Unwound Stator, PDF Page: 112 of 304	B Core Assembly i) Dimensional checking (check of core for waviness, core dia, Packet size and height after assembly) Quantum of Checks-Sample,Record Format-JIR,Remarks-CHP ii) Core Loss Test and Hot Spot Detection Quantum of Checks-Sample,Record Format-JIR,Remarks-CHP	B Core Assembly i) Dimensional checking (check of core for waviness, core dia, Packet size and height after assembly) Quantum of Checks-Sample,Record Format-JIR,Remarks-CHP* ii) Core Loss Test and Hot Spot Detection Quantum of Checks-Sample,Record Format-JIR,Remarks-CHP* CHP*(This test shall be witnessed at the manufacturer's works if stacking is carried out at the manufacturer's premises.However, in case the assembly is undertaken at site,the test shall form part of the field tests and shall be conducted in the presence of authorized representative of Engineer-Incharge (EIC) of the Employer
7	Volume- III D Model Quality assurance plan (MQAP) Generator & Accessories, B. iii), Stator Winding Bar, PDF Page: 113 of 304	B.Fiber Glass Covered Epoxy/Polyestrimide Varnish Bonded Recangular Copper Conductor iii) Breakdown Voltage Test at Room & rated temp Quantum of Checks-Sampling Plan,Record Format-TC,Remarks-TC	B.Fiber Glass Covered Epoxy/Polyestrimide Varnish Bonded Recangular Copper Conductor iii) Breakdown Voltage Test Quantum of Checks-Sampling Plan,Record Format-TC,Remarks-TC

Description of Work: Lot-III: Electro-mechanical works package of 240 MW (2X120MW) Uri-I Stage-II H.E Project, Baramulla District of UT of J&K, India
Tender ID.: 2026_ NHPC_906114_1

Technical_Q_Amendment_01

Sr. No.	Volume / Clause No. & Name / Page No.	Existing Clause of MQAP/QTS	Modified Clause
8	Volume- III D Model Quality assurance plan (MQAP) Generator & Accessories, B, Stator Winding Bar, PDF Page: 114 of 304	2) In Process Inspection B Mica Tape iv) Resin Content (for Resin Rich only) v)Voltality viii)Resin Flow Rate Quantum of Checks-Sampling Plan,Record Format-TC,Remarks-TC	2) In Process Inspection B Mica Tape iv) Resin Content (for Resin Rich only) v)Voltality (for Resin Rich only) viii)Resin Flow Rate (for Resin Rich only) Quantum of Checks-Sampling Plan,Record Format-TC,Remarks-TC
9	Volume- III D Model Quality assurance plan (MQAP) Generator & Accessories, 3.iv), Stator Winding Bar, PDF Page: 114 of 304	3) Final Inspection iv) IR after HV Test Quantum of Checks-Sample,Record Format-JIR,Remarks-CHP* CHP* for 5% (each unit) TC for 100%	3) Final Inspection iv) HV Test Quantum of Checks-Sample,Record Format-JIR,Remarks-CHP* CHP* for 5% (each unit) &TC for 100%
10	Volume- III D Model Quality assurance plan (MQAP) Generator & Accessories, B.iv), Air & Oil Coolers, PDF Page: 124 of 304	B Final Inspection iv)Trial assembly of oil coolers (or dummy frame) in Upper and Lower Brackets Quantum of Checks-Sample,Record Format-JIR,Remarks-CHP	B Final Inspection iv)Trial assembly of oil coolers (or dummy frame) in Upper and Lower Brackets Quantum of Checks-Sample ,Record Format-TC,Remarks-TC
11	Volume- III D Model Quality assurance plan (MQAP) Heat Ventilation and Air conditioning (HVAC) System, 6 . b), Heating, Ventilation and Air Conditioning (HVAC) System, PDF Page: 270 of 304	Assembly Test of Chillar unit - Performance Test at different loading condition - Capacity (TR) & Power Consumption	Performance Test at 100% loading condition - Capacity (TR) & Power Consumption.
12	Volume- III D Model Quality assurance plan (MQAP) Mechanical Workshop, Final Inspection, MECHANICAL WORKSHOP, PDF Page: 288 & 298 of 304	CHP for Final Stage for Mechanical Workshop Equipments	All CHP under Final inspection of Universal Milling Machine & Shaper Machine may be replaced with TC.
13	Volume- III D Model Quality assurance plan (MQAP) Excitation tranformer (Dry type), B.5, Raw Material, Pdf Page 135 of 304	B Fittings & Accessories 5 Off Circuit Tap Changer a) Routine Tests Quantum of Checks-100%,Record Format-TC,Remarks-TC	B Fittings & Accessories 5 Off Circuit Tap Changer a) Routine Tests Quantum of Checks-100%,Record Format-TC/COC,Remarks-TC/COC
14	Volume- III D Model Quality assurance plan (MQAP) BUS REACTOR, 8, Special Test, Pdf Page 163 of 304	Special Test g) Online Moisture Monitoring & DGA analyser functional test Quantum of Checks-One Reactor,Record Format-JIR,Remarks-CHP	Special Test g) Online Moisture Monitoring & DGA analyser functional test Quantum of Checks-Sample,Record Format-TC,Remarks-TC
15	Volume- III D Model Quality assurance plan (MQAP) 400 kV XLPE cable, 1.4, XLPE Compound, Pdf Page 166 of 304	1.4 XLPE Compound a)Tensile Strength b) Permitivity c) Dielectric loss angle Quantum of Checks-Sampling Plan,Record Format-TC,Remarks-TC	1.4 XLPE Compound a) Density b) Volume Resistivity c) Tensile Strength (If applicable) Quantum of Checks-Sampling Plan,Record Format-TC,Remarks-TC

Description of Work: Lot-III: Electro-mechanical works package of 240 MW (2X120MW) Uri-I Stage-II H.E Project, Baramulla District of UT of J&K, India
Tender ID.: 2026_ NHPC_906114_1

Technical_Q_Amendment_01

Sr. No.	Volume / Clause No. & Name / Page No.	Existing Clause of MQAP/QTS	Modified Clause
16	Volume- III D Model Quality assurance plan (MQAP) 400 kV XLPE cable, 2 (g)-ii, Electrical Type Test on Cables, Pdf Page 167 of 304	2 Electrical Type Test on Cables g) High Voltage Test ii) Water Immersion Quantum of Checks-01 Sampling Plan,Record Format-TC,Remarks-TC(Applicability of test shall be as per approved design/Tech Specification/ Relevant Standard)	2 Electrical Type Test on Cables g) High Voltage Test ii) Water Immersion (If Applicable) Quantum of Checks-01 Sampling Plan,Record Format-TC,Remarks-TC
17	Volume- III D Model Quality assurance plan (MQAP) 400 kV XLPE cable, 5(i), Acceptance Test, Pdf Page 169 of 304	5 Acceptance Test i) Water Content on XLPE insulation Quantum of Checks-Sample Plan,Record Format-JIR,Remarks-CHP	5 Acceptance Test i) Water Penetration Test Quantum of Checks-Sample Plan,Record Format-JIR,Remarks-CHP
18	Volume- III D Model Quality assurance plan (MQAP) 400 kV XLPE cable, 5(k), Acceptance Test, Pdf Page 169 of 304	5 Acceptance Test k) Lightning Impulse Test followed by a power frequency voltage Test Quantum of Checks-Sample Plan,Record Format-JIR,Remarks-CHP	5 Acceptance Test k) Lightning Impulse Voltage Test Quantum of Checks-Sample Plan,Record Format-JIR,Remarks-CHP
19	Volume- III D Model Quality assurance plan (MQAP) Cable Tray and Cable Junction Box, A-2(a), Fasteners and Hardwares, Pdf Page 209 of 304	A 2 Fasteners and Hardwares a) Quantity of Zinc Deposit Over Threaded Portion Quantum of Checks-Sampling Plan,Record Format-TC,Remarks-TC	A 2 Fasteners and Hardwares a) Mass of Zinc Coating Over Threaded Portion Quantum of Checks-Sampling Plan,Record Format-TC,Remarks-TC
20	Volume- III D Model Quality assurance plan (MQAP) -MV SWITCHGEAR & AUXILIARY, A-15, 15. Isolating Contacts Pdf Page 214 of 304	A15 Isolating Contacts a) Dimensional Check b) Plating Thickness c) Contact PressureQuantum of Checks- 100 %,Record Format-TC,Remarks-TC	A15 Isolating Contacts(If applicable) a) Dimensional Check b) Plating Thickness c) Contact PressureQuantum of Checks- 100 %,Record Format-TC,Remarks-TC
21	Volume- III D Model Quality assurance plan (MQAP) -Station Auxiliary transformer (SAT)- Dry type, B.5, Off Circuit Tap Changer, Pdf Page 217 of 304	B Fittings & Accessories 5 Off Circuit Tap Changer a) Routine Tests Quantum of Checks-100%,Record Format-TC,Remarks-TC	B Fittings & Accessories 5 Off Circuit Tap Changer a) Routine Tests Quantum of Checks-100%,Record Format-TC/COC,Remarks-TC/COC
22	Volume- III D Model Quality assurance plan (MQAP) - LV SWITCHGEAR SYSTEM AND AUXILIARY TRANSFORMERS, A1(a), Steel Sheets, Pdf Page 226 of 304	A1 Steel Sheets a) Dimension (Size of Sheet, Uniformity ofThickness, Surface Finish) Quantum of Checks-Sampling Plan,Record Format-TC,Remarks-TC	A1 Steel Sheets a) Dimension Quantum of Checks-Sampling Plan,Record Format-TC,Remarks-TC

Description of Work: Lot-III: Electro-mechanical works package of 240 MW (2X120MW) Uri-I Stage-II H.E Project, Baramulla District of UT of J&K, India
Tender ID.: 2026_ NHPC_906114_1

Technical_Q_Amendment_01

Sr. No.	Volume / Clause No. & Name / Page No.	Existing Clause of MQAP/QTS	Modified Clause
23	Volume- III D Model Quality assurance plan (MQAP) - Unit Auxiliary transformer (UAT), Station Service Transformer (SST), Distribution Transformer (DT) , Auxiliary Transformer (AT) - Dry type, B.5, Off Circuit Tap Changer, Pdf Page 234 of 304	B Fittings & Accessories 5 Off Circuit Tap Changer a) Routine Tests Quantum of Checks-100%,Record Format-TC,Remarks-TC	B Fittings & Accessories 5 Off Circuit Tap Changer a) Routine Tests Quantum of Checks-100%,Record Format-TC/COC,Remarks-TC/COC
24	Volume- III D Model Quality assurance plan (MQAP) GSU Transformer, 5.1 Windings(PICC/CTC)	5.1 Paper Insulated Copper Conductor (PICC/ CTC) a) Conductor dimensions (bare), Paper Covering arrangement, Resistivity, Tensile Strenth & Elongation, Visual check for Surface Finish, Corner radius Quantum of Checks-One Sample per Thickness per lot., Record Format-TC,Remarks-TC	5.1 Paper Insulated Copper Conductor (PICC/ CTC) a) Conductor dimensions (bare), Paper Covering arrangement, Resistivity, Tensile Strenth & Elongation, Visual check for Surface Finish, Corner radius Quantum of Checks-One Sample per Thickness per lot., Record Format-JIR,Remarks-CHP
	Quality Test specification (QTS)		
25	Volume- III D Quality Test specification (QTS) Clauses, 1.4	1.4 Quality Control and Assurance Inspections and tests shall be carried out by the Contractor as per approved QAP with due regard to stipulations in inspection and Test of “General TechnicalSpecification at various stages of manufacturing for assuring the full complianceof supply with the requirement of specification. Tests falling under the CustomerHold Point (CHP) category may be witnessed either physically or through video conferencing. The Employer reserves the right to witness these tests throughеither mode at the premises of the manufacturer or sub-vendor. CHP tests shallbe conducted at Employer-approved vendor/sub-vendor/supplier premises, as specified in the Employer-approved documents.	1.4 Quality Control and Assurance Inspections and tests shall be carried out by the Contractor in accordance with the Employer-approved Quality Assurance Plan (QAP), adhering to the Technical Specifications at various stages of manufacturing. Inspection & Test activities falling under the Customer Hold Point (CHP) may be witnessed by the authorized representative of the Employer at the premises of the Employer approved vendor, sub-vendor, or supplier as specified in the Employerapproved documents. The Employer reserves the right to witness such inspections either physically or through video conferencing depending upon the prevailing situation and requirement.
26	Volume- III D Quality Test specification (QTS) Clauses 8.2 Shop Tests	8.2 Shop Tests Special Tests Special tests given in MQAP shall be carried out on one transformer at the manufacturer works/approved sub-vendor of employer. However Frequency response analysis (FRA) shall be carried out on each unit at the manufacturers.work.	8.2 Shop Tests Special Tests Special tests given in MQAP shall be carried out on one transformer at the manufacturer works/approved sub-vendor of employer as per latest standard/ CEA guideline. However Frequency response analysis (FRA) shall be carried out on each unit at the manufacturers.work.

NHPC LIMITED
(A Govt. of India Navratna Enterprise)
NHPC Office Complex, Sector-33, Faridabad-121003, Haryana (India)
CIN: L40101HR1975GOI032564

Dated: 24.07.2026

Informative Replies

Name of Work: Lot-III: Electro-mechanical works package of 240 MW (2X120MW) Uri-I Stage-II H.E Project, Baramulla District of UT of J&K, India.

Ref: Tender Specification No. NH/Conts(EnM)-III/Uri-I Stage-II/ENM/2026/01

[E-Tender ID: 2026_NHPC_906114_1]

The replies/clarifications against pre-bid queries for the subject tender **not affecting the terms and conditions of tender document** is hereby attached as **"Informative Replies"** for information please.

Sd/-

General Manager,
Contracts (E&M)-III,
2nd Floor, Jyoti Sadan, NHPC Office Complex,
Sector-33, Faridabad-121003 (Haryana),
Tele # 0129-2588705
E-mail: nalinikantverma@nhpc.nic.in

LOT-III: ELECTRO-MECHANICAL WORKS OF URI-I STAGE-II HYDROELECTRIC PROJECT (240 MW) DISTRICT – BARAMULLA, UT OF J&K

INFORMATIVE REPLIES-COMMERCIAL

Part-A

COMMERCIAL

Sl. No.	Volume	Clause no.	Tender Provision	Queries	NHPC Reply
1	V (Forms & Procedures)	Appendix 2. Price Adjustment	The total adjustment (plus or minus) shall be subject to a **ceiling** amount of 25% of the Contract price during contractual completion period.	BHEL letter Ref No: MS-1-26-E-0501/Pre Bid-1 dated 12 June'2026 may please be referred in this regard. NHPC is requested to kindly remove the ceiling.	Bid condition shall prevail Please adhere to bid specifications.
2	V, Forms & Prcedures	Appendix -1, Terms of Payment, Price schedule no. 1 First bullet Fourth bullet	Five percent (5%) of the total EXW amount (as per Price Schedule No.1) as an **interest bearing** advance payment, if opted for, against receipt of invoice, Performance Security and an irrevocable Advance Payment Security equivalent to 110% of advance amount made out in favour of the Employer. Five percent (5%) of the total EXW amount (as per Price Schedule No.1) as an **interest bearing** advance payment, if opted for, against receipt of invoice and an irrevocable.Advance Payment Security equivalent to 110% of advance amount made out in favour of the Employer and on expiry of 10 months reckoned from the date of issue of Notification of Award or reckoned from the date of release of initial interest bearing advance, if applicable.	We request NHPC to kindly arrange to release 10% interest free advance on submission of Bank Guarantee of equivalent amount. Kindly review and confirm.	Bid condition shall prevail Please adhere to bid specifications.
3	V, Forms & Prcedures	Appendix -1, Terms of Payment, Price schedule no. 1 Eighth bullet	75% of the total or pro rata EXW amount alongwith **price variations**, if any (as per Price Schedule No.1), upon dispatch. The pro rata recovery/adjustment of advance alongwith interest shall be made at this stage.	We understand that 75% pro rata EXW amount and 100% price variation amount along with 100% applicable taxes and duties shall be released by Employer upon dispatch. Kindly confirm.	Bid specifications are clear in this regard. The 75% principal and the price variation are payable at the dispatch stage, as stated.

Sl. No.	Volume	Clause no.	Tender Provision	Queries	NHPC Reply
4	**V, Forms & Prcedures**	**Appendix -1, Terms of Payment, Price schedule no. 3**	Ninety percent (90%) (as per Price Schedule No.3) of the measured value of work performed by the Contractor, as identified in the said Program of Performance, during the preceding month, as evidenced by the Employer's authorization of the Contractor's application, will be made monthly. **Price variation**, if any, shall be payable at this stage.	We request NHPC to kindly arrange to release 10% interest free payment on mobilization of Contractor at site and 80% on basis of measured value of work performed. We understand that 100% price variation along with 100% applicable taxes and duties shall be payable along with payment on monthly performance of work . Kindly confirm.	No change to the 90% progressive-payment structure.
5	**V, Forms & Prcedures**	**Appendix -1, Terms of Payment**	5% payment of the contract price of each bill/ invoice raised against Price Schedule No. 1, Price Schedule No. 2, Price Schedule No. 3 above shall be deducted and kept as a **security deposit**. The above deducted amount shall be released after satisfactory completion of Defect Liability Period. The above deducted amount, if so desired by the Contractor during execution of contract may be released on submission of Bank Guarantee (BG) of equal amount	1. As Contractor shall be submitting performance security equivalent to 5% of Contract Price, we request NHPC not to deduct 5% payment from each bill in Price schedule 1,2 and 3, as 5% security deposit is already available with NHPC. 2. In case NHPC insists for this deduction and if Contractor opts for Bank Guarantee (BG) for release of payment, we request NHPC to kindly clarify the following :- - 'Statement of Performance' is required for this payment as well. If yes, we request NHPC to kindly clarify periodicity of 'Statement of Performance' against Security deposit. - Letter of Credit is applicable for this payment as well, Kindly confirm.	1. Not acceptable. Please adhere to bid specifications. 2. Bid specifications are clear in this regard. Please refer Sl. No. 3.3 of Appendix-1 -Vol.V-Forms & Procedures.
6	**Vol-IIB (SCC)**	**Annex-II Model Distribution of Shipping Documents**	The distribution of documents shall be as per Annex – II…… To Confirming Bank LR/RR/GR - **Original** Despatch Clearance Certificate - **Original**	We request NHPC to kindly review the requirement of original documents.	Please adhere to Bid Specifications. Original documents to the Confirming Bank remain a requirement, consistent with standard L/C and UCP practice.
7	**V, Forms & Prcedures**	**Appendix -1, Terms of Payment, PAYMENT PROCEDURES**	Details of Charges - All commissions and charges arising in the Employer's Country shall be borne by the Contractor.	NHPC has passed on financial burden on account of commissions and charges of Letter of Credit to Contractor. We request NHPC to kindly review.	Please adhere to Bid Specifications.

Sl. No.	Volume	Clause no.	Tender Provision	Queries	NHPC Reply
8	I, IFB	14, Annexure-1	Construction Schedule: i. Project completion period is 44 months from project zero date (Zero date is Civil Work Award Date i.e. 28.03.2026). ii. The total time period for **E&M works (Lot 2A)** is 38 months. iii. Time duration from Project Zero date, E&M contractor may modify duration to match 38 months schedule.	1. We request NHPC to kindly clarify the methodolgies in case award of EM package is delayed beyond 27.09.2026. 2. Construction schedule specifies timelines of certain activities of E&M- Supply and E&M-Services. We understand that the same is tentative and timelines of individual activities of E&M- Supply and E&M-Services (like Rotor Assembly, Stator Assembly) can be modified by E&M contractor during execution to meet the overall schedule of 38 months. Kindly confirm.	Bid specifications are clear in this regard. Please adhere to bid specifications.
9	0, ITB	11.4, f	All applicable taxes/ duties including GST as applicable and **assessed on the Employer** shall also be included in the Prices/ Rates in Price Schedule 2 & 3, which shall be deducted from the Contractor and deposited to the concerned authority by the Employer.	We understand that GST shall be applicable on supply/ services rendered by Contractor and further no tax shall be assessed on Contractor. Kindly confirm. In case any other Taxes and duties/ cess shall be asseessed, it is requested to kindly provide list of such other taxes/duties/ cess along with applicable rate at this stage. We also request NHPC to kindly clarify applicability of BOCW/Labour cess (if any) for E&M works.	Bid specifications are clear in this regard. Please adhere to bid specifications.
10	IIA GCC	14.2 Last para	All applicable taxes/ duties including GST and cess, if any as applicable and **assessed on the Employer** shall also be included in the Prices/ Rates, which shall be deducted from the Contractor and deposited to the concerned authority by the Employer. TDS wherever statutorily required under any Tax Act / Rule shall be deducted and deposited and necessary certificate shall be provided by the Employer.		
11	IIA GCC	Change in Laws and Regulations 36.1 2nd para	However, these adjustments would be restricted to **direct transactions** between the Employer and the Contractor and not on procurement of raw materials, intermediary components etc. by the Contractor.	Impact of change in laws/regulations cannot be limited to direct transactions only, as certain laws/regulations wrt raw materials, intermediary components may affect the costs and expenses of the Contractor and/or the Time for Completion. Kindly review.	Please adhere to Bid Specifications.
12	Volume-5 (Forms & Procedures)	Appendix 3	Third Party Liability Cover	Since Main EAR Insurance is in scope of Employer and Third Party liability insurance is normally integrated cover with Main EAR Policy, it is requested that third policy liability cover is excluded from Contractor scope.	Bid condition shall prevail. Please adhere to Bid specifications.

Sl. No.	Volume	Clause no.	Tender Provision	Queries	NHPC Reply
13	Vol-0 (ITB)	25. Commercial Evaluation	25.3 (d) Functional Guarantees of the Facilities (i) Bidders shall state the functional guarantees (e.g. performance, efficiency, consumption) of the proposed Facilities in response to the Technical Specifications. Plant and equipment offered shall have a minimum (or a maximum, as the case may be) level of functional guarantees specified in the Technical Specifications to be considered responsive. Bids offering plant and equipment with functional guarantees less (**or more**) than the minimum (**or maximum**) specified shall be rejected.	We request NHPC to kindly review applicability of 'more' & 'maximum'	Bid specifications are clear in this regard.
14	Vol-0 (ITB)	11.4	Bid Prices	We understand that Price to be quoted in price schedules is inclusive of taxes and duties which includes prices as appearing in Price schedule 4 (sum of Price schedule 1,2 and 3). In case of milestone payment in Schedule 1,2,3 kindly confirm that the payment shall be released including taxes and duties or excluding taxes and duties. Employer is requested to provide separate schedule for taxes and duties for clear segregation of basic price and taxes and duties. Kindly confirm that Contract price shall be inclusive or exclusive of taxes and duties.	Bid specifications are clear in this regard.
15	Vol. V (Forms & Procedures), Appendix -8	4.3	**Limitation of Liability** Subject to para 4.2 above, the Contractor's aggregate liability to pay liquidated damages for failure to attain the functional guarantees shall not exceed twenty five percent (25 %) of the Contract price.	As per tender condition, LD due to delay and performance is applicable on contract price. Taxes & duties are the levy of Govt. and are paid to Govt. Accordingly, We request NHPC to kindly consider Contract Price excluding taxes and duties for calculating liquidated damages for performance and delay. Further, as per Circular No. 178/10/2022-GST dated 03-08-2022 issued by Dept. of revenue, MoF, Govt. of India, in case of liquidated damages, penalty etc are levied on Contractor then Taxes & duties including GST will not be applicable. We request NHPC to review and modify the clause accordingly.	Bid specifications are clear in this regard. Please adhere to bid specifications.
16	Vol. II A (GCC)	26.2	**Completion time Guarantee** If the Contractor fails to attain Completion of the Facilities including taking over or any part thereof within the Time for Completion or any extension thereof under GCC Clause 40 (Extension of Time for Completion), the Contractor shall pay to the Employer liquidated damages in the amount computed @ zero point two five percent (0.25%) of the Contract price per week per unit each.		

Sl. No.	Volume	Clause no.	Tender Provision	Queries	NHPC Reply
17	Vol-IIA (GCC)	35.1 (d)	**Unforeseen Conditions** the additional cost and expense that the Contractor is likely to incur as per Annex-A to this GCC.	Annexure A referred in clause is on account of idling of resources. In case any changes are required due to unforeseen conditions beyond idling claims, we understand that same shall be dealt as per Cl. 39 of GCC (Change of Facilities). Kindly confirm.	Bid specifications are clear in this regard.Please adhere to Bid specifications.
19	V, Forms & Prcedures	Appendix 2	**Price Adjustment Formula for Supply of Plant and Equipment** P1 = PO x {0.20 + 0.35 (L1/L0) + 0.45 (M1/M0) }– PO	We request NHPC to review fix component of 0.20, mentioned in Price adjustment formula. We request NHPC not to consider any fixed component.	Please adhere to Bid specifications.
	V, Forms & Prcedures	Appendix 2	**Price Adjustment Formula for Installation of Plant and Equipment** P1 = PO x {0.20 + 0.60 (L1/L0) + 0.15 (F1/F0) + 0.05 (M1/M0) }– PO		
20	Vol-IIA (GCC)	32	**Care of Facilities**	In the event that project is delayed substantially beyond the original contract completion period, due to reasons not attributable to contractor, solution satisfactory to contractor needs to be worked out wrt various aspects, but not limited to following:- - Handing over of items (Spares,etc) - Taking over of EOT crane by NHPC - Conversion of Bank Guarantees into Corporate Guarantees - Revision of contract price Kindly review and confirm.	Please adhere to bid specifications.
21	Vol-IIA (GCC)	26.2	**Completion time Guarantee** If the Contractor fails to attain Completion of the Facilities including taking over or any part thereof within the Time for Completion or any extension thereof under GCC Clause 40 (Extension of Time for Completion), the Contractor shall pay to the Employer liquidated damages in the amount computed @ zero point two five percent (0.25%) of the Contract price per week per unit each.	The rate of computation of liquidated damages is on the higher side. NHPC is requested to kindly reduce the same.	Please adhere to Bid specifications.

Sl. No.	Volume	Clause no.	Tender Provision	Queries	NHPC Reply
22	Vol-IIB (SCC)	18	**GCC Clause 27 Defect Liability** GCC Clause 27.7 is deleted and substituted by the following: …….The Engineer-in-charge shall approve the list of above mentioned manpower..... For the remaining period of Defect Liability Period the above manpower shall be reviewed and finalized by the Engineer-in-charge for any replacement/alterations	The requirement of clause shall result in idling of Manpower. NHPC is requested not to insist on this clause. Contractor shall depute their representative expeditiously to attend the problem as per requirement at site. Kindly accept.	Please adhere to Bid specifications.
23	Vol-IIIB (GTR)	1.10.2.1	The proposed training for various equipment and systems shall be minimum 30 man-months.	We request NHPC to kindly clarify the following details:- 1. List of man-months against various equipment and systems 2. The training will be provided at Contractor's manufacturing works/ Project Site. Kindly confirm. 3. Kindly confirm that no refund shall be provided to NHPC if training not availed by NHPC.	Please refer Informative replies-Technical
24	Vol-IIB (SCC)	6.11	The prices of all future requirements of item of spares beyond 3 years operational requirement will be derived from the corresponding ex-works price at which the order for such spares have been placed by Employer as a part of Specified spares or Recommended spares. Ex-works order price of **future spares** shall be computed in accordance with the price adjustment provisions covered under the main Contract with base indices mentioned therein and there will be no ceiling on the amount of variation in the prices. The above option for procuring future recommended spares by the Employer shall remain valid for the **period of 5 years** from the date of successful completion of Commissioning of the equipment.	1. The future requirements of item of spares beyond 3 years' operational requirement is additional to existing contract. Also, provision of price adjustment available in the contract is to mitigate to some extent the increase in prices of items / materials covered in the scope of E&M Bidder during contract period. Price adjustment does not reimburse the increase of actual cost of material / item. Therefore, we request Employer not to link price of long-term spares with price adjustment provided in the tender. In future, if recommended spare parts are required by Employer, fresh prices/offers shall be mutually agreed. Please confirm. 2. We request NHPC to kindly clarify the modalities in the event that project is delayed beyond the original contract completion period.	Please adhere to Bid specifications.

Sl. No.	Volume	Clause no.	Tender Provision	Queries	NHPC Reply
25	V, Forms & Prcedures	Appendix -1, Terms of Payment, PAYMENT PROCEDURES	iii) Payments for other balance of items excluding Specified spares and Tools and Instruments shall be claimed by the Contractor in not more than Fifteen installments each. iv) Payment for Specified spares and Tools and Instruments for each of these items shall be claimed in not more than Ten installments each.	iii) We understand that Fifteen installments are applicable separately for each package (Chapterwise). Kindly confirm. iv) We request NHPC to kindly remove the ceiling on number of installments for Specified spares and Tools and Instruments.	Please adhere to Bid specifications.
26		NIT	(v) Estimated cost INR 641.11 Crore	We request NHPC to kindly clarify the following:- - Estimated cost includes Taxes/duties? - Base date of Estimates?	Please refer NIT Cl. No.1.1(v), it clearly mentions 'inclusive of GST'
27	Vol-IIA (GCC)	Design and Engineering 20.3.2	Within twenty-one (21) days after receipt by the Engineer In-Charge of any document requiring the Engineer In-Charge's approval in accordance with GCC Sub-Clause 20.3.1, the Engineer In-Charge shall either return one copy thereof to the Contractor with its approval endorsed thereon or shall notify the Contractor in writing of its disapproval thereof and the reasons therefor and the modifications that the Engineer In-Charge proposes. Should the Employer not give its approval/ comments within the said period of **twenty one (21) days**, Contractor shall serve notice on the Employer to this effect and the Employer shall give its approval/ comments within **fifteen (15) days** from receipt of such notice. In case such approval/ comment is not communicated within fifteen (15) days, submittals of the Contractor will be deemed to have been approved.	The current timelines defined for the project are already compressed. Under such constraints, we request NHPC to kindly review to reduce timelines of 21 days / 15 days. NHPC is also requested to clarify timelines for vendor approval, Statement of Performance, etc.	Please adhere to bid specifications.
28	Volume-0 ITB	9.1 A v	Bidders appreciation of the project and self declaration of acceptance of all the terms & conditions, Technical Specifications, Drawings, Model QAP & QTS including all annexures/ attachments/ Forms / Schedules etc. [Attachment-4 to Bid form (Forms & Procedures)]	We understand that following Bid Document are not required to be submitted Online/ Offline along with bid. a)Tender documents (Vol-0, I, II, III, IV & V) b)Corrigendums/ Clarifications/ Replies to queries issued by M/s NHPC, after the Pre bid meeting Please confirm our understanding.	Bid specifications are clear in this regard. Please refer Bid Form-Vol.-V, Cl. No. 2.0 (d) for better clarity.
29	NIT	1.2 (vii)	Online Bid Submission End Date & Time : 24/07/2026 (06:00PM) Friday	We request NHPC to kindly extend date of submission of bid by 6-8 weeks post issuance of pre-bid clarifications. Kindly consider.	Please dahere to Bid specifications.

Sl. No.	Volume	Clause no.	Tender Provision	Queries	NHPC Reply
30	**Vol-III A (General Technical Specification)**	**8.4 Transport and Storage**	All parts of the plant shall be brought, as far as possible, to their final place of erection. The Contractor shall construct storage facilities at site as per clause no 1.11.3 of section 1 (GTR) of Vol 3 B (PTS). The warehouses shall be weatherproof, with good ventilation and solid floors. The floors of the warehouses and storage areas shall be designed to carry the loads imposed on them by the stored parts.	As wareouse at clause 1.11.3 (GTR/PTS/IIIB) stands deleted, This part of clause 8.4 of Vol IIIA may please be deleted / modified accordingly.	Please refer Informative replies-Technical
31	**Vol-I; IFB**	**10**	Labour Licence The contractor shall be required to abide by all the rules and regulations of the State Government during execution of the work. The contractor shall be required to obtain labour licence for deployment of labour from the concern Authority. The contractor has to maintain proper Liaison with the District Authorities and shall obtain the necessary requisite NOCs. The contractor shall not be allowed to construct the labour camps in the restricted area and his workmen shall not be allowed to reside overnight in the restricted area except for work duties.	E&M Contractors need an authorized certificate from the principal employer (NHPC) (in Form-3 or Form-V) to apply for labour license for their subcontractors. Employer is requested to kindly confirm that they will issue necessary required documents to E&M vendors.	Bid specifications are clear. For clarity, please also refer GCC Cl 23 (I) , which states that "the Employer shall facilitate/assist Contractors in obtaining necessary permits from District Authorities."

CLOT-III: ELECTRO-MECHANICAL WORKS OF URI-I STAGE-II HYDROELECTRIC PROJECT (240 MW) DISTRICT – BARAMULLA, UT OF J&K

INFORMATIVE REPLIES

Part-B

Commercial

No.	Volume	Document Reference	Clause No.	Original Language	Queries from Bidder	NHPC Reply
32	Vol IIA read with Vol V	General Conditions of Contract (Pg. 3 of 110) read with Form 3 - Form of Contract Agreement (Pg. 226 of 311)	Clause 1.1 read with Article 3	**Definition** **"Effective Date"** means the date from which the time for completion shall be determined as stated in Article 3 (Effective Date for Determining Time for Completion) of the Contract Agreement.	For Clarity ,we request M/s NHPC to kindly incorporate the following definitions of effective date and commencement date. 1. Effective date shall be the date of issuance of Letter of Award to the contractor 2. Commencement date shall be the latest of the following events. a). Date of signing of the contract agreement. b). Receipt of Interest free advance in line with the payment terms. c). Opening of confirmed and irrevocable letter of credit (LC) within 30 days from the Effective date of Contract. Please accept	Bid condition shall prevail Please adhere to bid specifications.
33	Vol IIA	General Conditions of Contract Page 21 of 110	Clause 13 Securities	**Clause 13.2 - Advance Payment Security** **Sub-Clause 13.2.1 (i)** Advance payment, maximum of 10% of Contract Price (for supply portion only) may be released. Such advance payment shall be interest bearing which shall be at Long term (3 years) MCLR of State Bank of India plus margin of 150 basis points above MCLR as on 28 days prior to Bid Submission date calculated on daily basis.	We request NHPC to modify this clause as under:- Advance payment, maximum of 10% of Contract Price (for supply portion only) may be released. Such advance payment **shall be released against submission of interest bearing bank guarantee** which shall be at Long term (3 years) MCLR of State Bank of India plus margin of 100 basis points above MCLR as on 28 days prior to Bid Submission date calculated on daily basis. **Please note, similar provision is provided by NEEPCO which is 100% subsidiary of NTPC. Kindly accept our request.**	Bid condition shall prevail Please adhere to bid specifications.
34	Vol. II A	General Conditions of Contract Page No. 26 of 110	Clause 16 Confidentiality	**Sub-Clause 16.5:** The provisions of this GCC Clause 16 shall survive termination, for whatever reason, of the Contract	We request that the following line be added at the end of this Sub-Clause: **However, the obligation of Parties as to confidentiality shall cease to exist after a period of 2 years from the date of termination or expiration of Contract, as the case may be.** Kindly confirm & accept	Bid condition shall prevail Please adhere to bid specifications.

No.	Volume	Document Reference	Clause No.	Original Language	Queries from Bidder	NHPC Reply
35	Vol. II A	General Conditions of Contract Page No. 32 of 110	Clause 20 Approval/ Review of Technical Documents by Engineer-in-charge	**Sub-Clause 20.3.2:** Within twenty-one (21) days after receipt by the Engineer In-Charge of any document requiring the Engineer In-Charge's approval in accordance with GCC Sub-Clause 20.3.1, the Engineer In-Charge shall either return one copy thereof to the Contractor with its approval endorsed thereon or shall notify the Contractor in writing of its disapproval thereof and the reasons therefor and the modifications that the Engineer In-Charge proposes. Should the Employer not give its approval/ comments within the said period of twenty one (21) days, Contractor shall serve notice on the Employer to this effect and the Employer shall give its approval/ comments within fifteen (15) days from receipt of such notice. In case such approval/ comment is not communicated within fifteen (15) days, submittals of the Contractor will be deemed to have been approved.	We request NHPC to modify this clause as under for saving time in approval processess same being beneficial for both Parties to ensure timely completion: Within ~~twenty one (21)~~ **Fourteen (14)** days after receipt by the Engineer In-Charge of any document requiring the Engineer In-Charge's approval in accordance with GCC Sub-Clause 20.3.1, the Engineer In-Charge shall either return one copy thereof to the Contractor with its approval endorsed thereon or shall notify the Contractor in writing of its disapproval thereof and the reasons therefor and the modifications that the Engineer In-Charge proposes. Should the Employer not give its approval/ comments within the said period of ~~twenty one (21)~~ **Fourteen (14) days**, Contractor shall serve notice on the Employer to this effect and the Employer shall give its approval/ comments within ~~fifteen (15)~~ **seven (7)** days from receipt of such notice. In case such approval/ comment is not communicated within ~~fifteen (15)~~ **seven (7)** days, submittals of the Contractor will be deemed to have been approved. Kindly accept.	Bid condition shall prevail Please adhere to bid specifications.
36	Vol. II A	General Conditions of Contract Page 36 of 110	Clause 21 Procurement	**Sub-Clause 21.4 Customer's Clearance: (Not used)**	We understand that the scope of Custom duty on imported Plant and Equipment and Contractor's Equipment at the point(s) of import shall lie with Employer. Kindly confirm	Bid specifications are clear in this regard.Please adhere to bid specifications.
	Vol. II A	General Conditions of Contract Page 46 of 110	Clause 24 Completion of Facilities	**Sub-Clause 24.4:** As soon as all works in respect of Pre-commissioning are completed and, in the opinion of the Contractor, the Facilities or any part thereof is ready for Commissioning, the Contractor shall so notify the Engineer In-Charge in writing.	We request that this Clause be modified as under: As soon as all works in respect of Pre-Commissioning are completed, and, in the opinion of the Contractor, the Facilities or any part thereof is ready for Commissioning, the Contractor shall so notify to the Engineer-in-charge in writing. **However, in the event the works in respect of Pre-Commissioning (Completion) has not been successfully completed or has not been carried out for reasons not attributable to the Contractor within a period of 6 months of scheduled Completion period specified in Contract/ Programme of Performance or any other period agreed upon by the Engineer In-Charge and the Contractor, the Contractor shall be deemed to have fulfilled its obligations with respect to the Completion of the Facilities and the provisions relating to Liquidated Damages/ Penalty as provided in this Contract, shall not apply and liability of the Contractor with respect to Defects Liability under clause 27 shall commence forthwith**. Kindly accept.	Bid condition shall prevail Please adhere to bid specifications.
				Sub-Clause 24.5: The Engineer In-Charge shall, within fourteen (14) days after receipt of the Contractor's notice under GCC Sub Clause 24.4, either issue a Completion Certificate in the form specified in the Forms and Procedures	In accordance with the changes proposed in Sub-Clause 24.4, we request that this Sub-Clause 24.5 shall be amended as under: The Engineer In-Charge shall, within fourteen (14) days after receipt of the Contractor's notice under GCC Sub Clause 24.4, either issue a Completion Certificate/ **deemed completion certificate** in the form specified in the Forms and Procedures ..... Kindly accept.	Bid condition shall prevail Please adhere to bid specifications.

No.	Volume	Document Reference	Clause No.	Original Language	Queries from Bidder	NHPC Reply
37	Vol. II A	General Conditions of Contract Page No. 49 of 110	Clause 26 Completion Time Guarantees	**Sub-Clause 26.2:** If the Contractor fails to attain Completion of the Facilities including taking over or any part thereof within the Time for Completion or any extension thereof under GCC Clause 40 (Extension of Time for Completion), the Contractor shall pay to the Employer liquidated damages in the amount computed @ zero point two five percent (0.25%) of the Contract price per week per unit each.	We request that this Clause be modified with the following wordings: If the Contractor fails to attain Completion of the Facilities including taking over or any part thereof within the Time for Completion or any extension thereof under GCC Clause 40 (Extension of Time for Completion),**for reasons solely attributable to the Contractor,** the Contractor shall pay to the Employer liquidated damages in the amount computed @ zero point two five percent (0.25%) of the Contract price per week per unit each. Kindly accept.	Bid condition shall prevail Please adhere to bid specifications.
					We understand that the LD applicable shall be applicable on the Contract Price excluding all taxes & duties. Kindly confirm & accept.	Bid condition shall prevail Please adhere to bid specifications.
38	Vol. II A	General Conditions of Contract Page 50 of 110	Clause 27 Defects Liability	**Sub-Clause 27.2:** The Defect Liability Period shall be thirty six (36) months from the date of issue of Taking-Over Certificate of the generating unit which is commissioned first or twenty four (24) months from the date of issue of Taking-Over Certificate of the generating unit which is commissioned last whichever happens earlier	We request that this Clause be amended as under: The Defect Liability Period shall be thirty six (36) months from the **date of delivery of equipment or thirty (30) months** from the date of issue of Taking-Over Certificate of the generating unit which is commissioned first or twenty four (24) months from the date of issue of Taking-Over Certificate of the generating unit which is commissioned last whichever happens earlier Kindly note that in many government tenders, the Defects Liability Period has been linked to supply, accordingly we request that this CLause too be modified. For your kind reference DLP Clause of NEEPCO- HEO is attached herewith as **Annexure -1.** Kindly accept	Bid condition shall prevail Please adhere to bid specifications.
		General Conditions of Contract Page 51 & 52 of 110		**Sub-Clause 27.8:** Upon correction of the defects in the Facilities or any part thereof by repair/replacement, such repair/replacement shall have the Defect Liability Period extended by a period of twenty-four (24) months from the time such replacement/repair of the Facilities or any part thereof or up to forty eight (48) months from the date of Operational Acceptance of the Facilities (or any part thereof) whichever is earlier.	We understand that the overall Defects Liability Period including repair and replacement if any, shall not exceed 48 months from the date of Operational Acceptance of the Facilities (or part thereof). Kindly confirm.	Bid condition shall prevail Please adhere to bid specifications.
		General Conditions of Contract Page 52 of 110		**Sub- Clause 27.8.1:** At the end of the Defect Liability Period, the Contractor's liability ceases except for latent defects. The Contractor's liability for latent defects warranty shall be limited to a period of five (5) years from the end of Defect Liability Period.	We request that the liability of the Contractor qua Latent Defects shall be decreased and the clause be modified as under: At the end of the Defect Liability Period, the Contractor's liability ceases except for latent defects. The Contractor's liability for latent defects warranty shall be limited to a period of ~~five (5)~~ **two (2)** years from the end of Defect Liability Period. Kindly accept.	Bid condition shall prevail Please adhere to bid specifications.

No.	Volume	Document Reference	Clause No.	Original Language	Queries from Bidder	NHPC Reply
39	Vol. II A	General Conditions of Contract Page 63 of 110	Clause 37 Force Majeure	**Sub-Clause 37.1 (e) :** Acts of God such as earthquake (above magnitude of 7 of Richter Scale), any natural calamity, as notified by the Government of India viz. spread of virus (corona virus in instant case) beyond human control, lightning, unprecedented floods	Kindly note that as per the reports published by local government body - District Disaster Management Authority, Baramulla, the entire region of Baramulla, including Uri, fall under Sesimic Zone V, which means that geologically the area is highly susceptible to earthquakes. Earthquakes of any magnitude may leave a scarring impact on the HEP works, while most civil & eletcromechanical structures may sustain a mild-moderate instensity earthquake, but an earthquake measuring 7 on Richter scale is bound to adversely impact the structure, accordingly we request that this parameter of 7 be done away with or the richter level be reduced to **5 or less than 5** (mild to moderate) Relevant page of the DDMA report of 2024 is attached herewith as **Annexure - 2** we further request the **deletion** of adjective - "unprecedented" before the word Floods. Kindly accept.	Bid condition shall prevail Please adhere to bid specifications.
				Sub-Clause 37.2: If either Party is prevented, hindered or delayed from or in performing any of its obligations under the Contract by an event of Force Majeure, then it shall notify the other in writing of the occurrence of such event and the circumstances thereof within fourteen (14) days after the occurrence of such event	Kindly note that while the Force majeure event commence, the implications of the same may be felt on the execution of Contract at a time subsequent thereto, in view of this reasoning we propose the following amendment to this Clause: If either Party is prevented, hindered or delayed from or in performing any of its obligations under the Contract by an event of Force Majeure, then it shall notify the other in writing of the occurrence of such event and the circumstances thereof within fourteen (14) days after ~~the~~ **becoming aware of the** occurrence of such event Kindly accept.	Bid condition shall prevail Please adhere to bid specifications.
40	Vol. II A	General Conditions of Contract Page 69 & 70 of 110	Clause 40 Extension of Time for completion	**Sub-Clause 40.2:** Except where otherwise specifically provided in the Contract, the Contractor shall submit to the Engineer InCharge a notice of a claim for an extension of the Time for Completion, together with particulars of the event or circumstance justifying such extension as soon as reasonably practicable after the commencement of such event or circumstance. As soon as reasonably practicable after receipt of such notice and supporting particulars of the claim, the Employer and the Contractor shall agree upon the period of such extension.	Kindly amend this clause as follows as this would help in early resolution of issues & timely completion of project: Except where otherwise specifically provided in the Contract, the Contractor shall submit to the Engineer InCharge a notice of a claim for an extension of the Time for Completion, together with particulars of the event or circumstance justifying such extension as soon as reasonably practicable after the commencement of such event or circumstance. As soon as reasonably practicable **but not later than 30 days** after receipt of such notice and supporting particulars of the claim, the Employer and the Contractor shall agree upon the period of such extension..... Kindly accept.	Bid condition shall prevail Please adhere to bid specifications.
41	Vol. II A	General Conditions of Contract Page 78 & 79 of 110	Clause 42 Termination	**Sub-Clause 42.6:** Any GST liability on account of Termination of Contract shall be borne by the Contractor.	We request that this Clause be modified as under: Any GST liability on account of Termination of Contract **for reasons not attributable to the Contract,** shall be borne by the ~~Contractor~~ **Employer.** Kindly accept.	Bid condition shall prevail Please adhere to bid specifications.

No.	Volume	Document Reference	Clause No.	Original Language	Queries from Bidder	NHPC Reply
42	Vol. II A	Annexure A to GCC Page 83 of 110	Clause 4 Charges on account of extension	**Paragraph 2:** Charges towards extended warranty shall be calculated up to 2% of the composite contract price per annum on pro-rata basis	Kindly note that extension of warranty is generally charged at 4% or even higher by the sub-contractors. Therefore, we request you to kindly increase the percentage value for extension of warranty. Kindly accept.	Bid condition shall prevail Please adhere to bid specifications.
43	Vol. II A	Annex A to GCC Page 81 of 110		**Valuation of Idling Time Cost Claims**	This Annexure A does not cover the valuation of the Idling Time for the Contractor's own employees for design, project management and other functions who will be involved in the project execution & who will book the hours there. We humbly request you to include the same in idling time cost claims. Kindly confirm.	Bid condition shall prevail Please adhere to bid specifications.
44	Vol. II B	Special Conditions of Contract Page 1 of 35	Clause 4 GCC Clause 24.3 & 25.2 Completion Guarantee Test- Acceptance	**Sub-Clause 4.1:** In the event that the Contractor is unable to proceed with the Precommissioning of the Facilities pursuant..... Facilities, pursuant to GCC Clause 32, and GCC Clause 41.1, Suspension, shall not apply. In this case the following provisions shall apply. **Sub-Clause 4.2** When the Contractor is notified by the Engineer In-Charge, that he will be unable to proceed with the activities and obligations pursuant to above Sub-Clause 4.1, the Contractor shall be entitled to the following:..... **Sub-Clause 4.3** In the event that the period of suspension under above Sub-Clause 4.1 actually exceeds one hundred eighty (180) days, the Employer and Contractor shall mutually agree to any additional compensation payable to the Contractor, failing which the dispute will be resolved in accordance with GCC Clause no.6. **Sub-Clause 4.4** When the Contractor is notified by the Engineer In-Charge that the plant is ready for Pre-commissioning/ Commissioning, the Contractor shall proceed without delay in performing all the specified activities and obligations under the contract.	We request NHPC to include the below mentioned equitable provisions & amend the clause as follows. **Sub-Clause** 4.1: In the event that the Contractor is unable to proceed with the Precommissioning of the Facilities pursuant..... Facilities, pursuant to GCC Clause 32, and GCC Clause 41.1, Suspension, shall ~~not~~ apply~~. In this case the following provisions shall apply.~~ **as per the following provisions.** **Sub-Clause 4.2** When the ~~Contractor~~ **Engineer In-Charge** is notified by the ~~Engineer In-Charge~~ **Contractor**, that he will be unable to proceed with the activities and obligations pursuant to above Sub-Clause 4.1, the Contractor shall be entitled to the following:.... **Sub-Clause 4.3** In the event that the period of suspension under above Sub-Clause 4.1 actually exceeds one hundred eighty (180) days, **the Contractor may terminate the Contract at its option by giving a notice of 14 days** or the Employer and Contractor shall mutually agree to any additional compensation payable to the Contractor **along with additional terms & conditions, if any,** failing which the dispute will be resolved in accordance with GCC Clause no.6. **Sub-Clause 4.4** When the Contractor is notified by the Engineer In-Charge **as per the agreed time schedule** , that the plant is ready for Pre-commissioning/ Commissioning, the Contractor shall proceed without delay in performing all the specified activities and obligations under the contract. **However, if the Contractor feels that the equipment supplied by it are not in a proper condition for the pupose of Precommissioning, Commissioning and/or Performance Guarantee tests, it shall notify the Employer of the same & request for the suitable repair/replacement.** Kindly accept.	Bid condition shall prevail Please adhere to bid specifications.
45	Vol. IIB	Special Conditions of Contract Page 5 & 6 of 35	Clause 6 Spares	**Sub-Clause 6.7 Defect Liability of Spares:** **6.7.1 (b) & (c) :** However, if such spare parts are put to use after 24 months of the delivery at Site then the guarantee of such spares will stand valid till the expiry of 36 months from the scheduled date of the completion of Commissioning of equipment/plant of trouble free operation after such spares are put in service.	The warranty period of the same equipment has to be same and cannot be different. We also understand that (b) & (c) are applicable only for Recommended Spares. Please confirm.	Please adhere to bid specifications.

No.	Volume	Document Reference	Clause No.	Original Language	Queries from Bidder	NHPC Reply
46	Vol. IIB	Special Conditions of Contract Page 13 & 14 of 35	Clause 18 GCC Clause 27.7	**GCC Clause 27.7 is deleted & substituted by the following:** The Contractor shall depute, initially, for first 50% of the time of Defect Liability Period, at site one coordinator and sufficient number of Supervisors/skilled technicians, to coordinate and repair, modify and replace the faulty system in Defect Liability Period. The Engineer-in-charge shall approve the list of above mentioned manpower. The above skilled manpower shall take up all necessary steps for repair, modification or replacement of defects, deficiencies or damages	We request that this Clause be amended as under: The Contractor shall depute, initially, for first 50% of the time of Defect Liability Period, at site one coordinator and sufficient number of Supervisors/skilled technicians **as are needed in the opinion of the Contractor,** to coordinate and repair, modify and replace the faulty system in Defect Liability Period. The Engineer-in-charge shall approve the list of above mentioned manpower. The above skilled manpower shall take up all necessary steps for repair, modification or replacement of defects, deficiencies or damages. Kindly accept.	Bid condition shall prevail Please adhere to bid specifications.
47	Vol. IIIB	Particular Technical Specifications Page 2 - 7 & 2 -8	Clause 2 Turbine and Accessories	**Sub-Clause 2.4 Performance Guarantee:** **2.4.3 Caviation Pitting Guarantee:** **B) For all other turbine parts combined - stay ring, guide vanes, head cover, bottom ring, discharge ring & draft tube liner:** (Para 3) The Contractor shall also make the necessary alterations ..... period of 8,000 operating hours of power production. The guarantee will be renewed each time the turbine fails to meet the guarantee. Cavitation ..... amount of damage and effect minor corrections.	We request that Cavitation guarantee shall be capped and accordingly request the following modification to these Clauses: (Para 3) The Contractor shall also make the necessary alterations ..... period of 8,000 operating hours of power production. The guarantee will be renewed each time the turbine fails to meet the guarantee. **However, the overall cavitation guarantee period for repaired portion shall end at 24 months from the date of issue of taking over certificate of generating unit commissioned last.** Cavitation ..... amount of damage and effect minor corrections. Kindly note that multiple Government Utilities in India have expressly capped the cavitation guarantee. Cavitation is influenced by several operational and site-specific factors beyond the Bidder's exclusive control. In light of the above, the Bidder cannot accept unlimited liability in respect of cavitation and requests amendment in line with the proposed wordings. Extracts of relevant clauses of various tenders released by Government Utilities expressly capping cavitation guarantee are attached herewith as **Annexure-3**	Please refer Informative Replies-Technical
48	Vol. IIIB	Particular Technical Specifications (Page No. 2-8) and (Page No. 5 - 6)	Clauses 2 - Turbine & Accessories Clause 5	**Clauses 2.4.4 & 5.4.: Liquidated damages for shortfall in output and efficiency**	Kindly note that the LD rates for shortfall in Weighted average efficiency and the output are very high. We humbly request you to re-evaluate and reduce the LD values.	Please refer Informative Replies-Technical

No.	Volume	Document Reference	Clause No.	Original Language	Queries from Bidder	NHPC Reply
49	Vol. V	Forms & Procedures Page 226 of 311	3. Form of Contract Agreement	**Sub-Clause 3.1 Effective Date (Reference GCC Clause 1):** The Time of Completion of the Facilities shall be determined from the date of Notification of Award provided all of the following conditions have been fulfilled within a period of two (2) months from the date of said Notification of Award : (a) This Contract Agreement has been duly executed for and on behalf of the Employer and the Contractor; (b) The Contractor has submitted to the Employer the performance security and the advance payment guarantee; (c) Advance payment (if any) to be made by employer against advance payment security	We request the insertion of sub-point (d) as under to this Clause: The Time of Completion of the Facilities shall be determined from the date of Notification of Award provided all of the following conditions have been fulfilled within a period of two (2) months from the date of said Notification of Award : (a) This Contract Agreement has been duly executed for and on behalf of the Employer and the Contractor; (b) The Contractor has submitted to the Employer the performance security and the advance payment guarantee; (c) Advance payment (if any) to be made by employer against advance payment security **(d) opening of confirmed & irrevocable at sight Letter of Credit (L/C)** Kindly accept	Please adhere to bid specifications.
50	Vol. V	Forms & Procedures Page 228 of 311	Appendix 1 - Terms & Procedures of Payment	**Terms of Payment:** **Price Schedule No.1 Plant & Equipment Supplied from within the Employer's Country:** Two & half percent (2.5%) of the toatl EXW amount (as per Price Schedule No. 1) after submission & approval of the balance data for Civil Design & completion of major design works of Turbine & Generator and approval of design memorandum of all the packages and placement of POs for at least 50% BOP items/ systems & submission of drawings (as required) and on expiry of 14 months reckoned from the date of issue of Notification of Award or reckoned from the date of release of initial interest bearing advance, if applicable.	The Contractor shall provide the un-priced copies of POs placed. **Please confirm.**	Please adhere to bid specifications.

No.	Volume	Document Reference	Clause No.	Original Language	Queries from Bidder	NHPC Reply
51	Vol. V	Forms & Procedures Page 231 & 232 of 311	Payment Procedures	Except as above, other payments shall be arranged through irrevocable Letter of Credit opened in a designated Bank (Issuing bank), which shall make payments to the Contractor upon presentation of documents against conditions specified in the Letter of Credit to the Negotiation bank of the Contractor. The contractor shall provide quarterly cash flow statement as per payment schedule two months in advance to the Engineer-in-charge to facilitate opening/extension of L/C in time. The amount of L/C shall be equivalent to the projected quarterly cash flow of the Contractor. The L/C for the said amount shall be opened by the Employer thirty (30) days prior to the scheduled date of 1st payment under the Contract against the L/C and shall be maintained thereafter by extending the same on quarterly basis as per the projected cash flow of the Contractor. The conditions of Letter of Credit shall be as below:	As requested in the foregoing queries, our request to NHPC is reiterated to open the L/C within 2 months from the date of said Notification of Award. Kindly accept.	Please adhere to bid specifications.
				Transshipment - Not allowed/Allowed in exceptional circumstances only. (Applicable for dispatch of materials only)	Kindly allow provisions of transshipment.	Please adhere to bid specifications.
				Details of Charges: All commissions & charges arising in the Employer's Country shall be borne by the Contractor	We request NHPC to accept that the charges shall be borne by the Employer.	Please adhere to bid specifications.
52	Vol. V	Forms & Procedures Page 239 of 311	Appendix 2 Price adjustment	(c) The total adjustment (plus or minus) shall be subject to a ceiling of 25% of the Contract Price during contractual completion period	We request NHPC to kindly remove the ceiling limit on total adjustment of price during contractual completion period as commodities prices are fluctuating a lot in recent times. Kindly confirm.	Please adhere to bid specifications.
53	Vol. V	Forms & Procedures Page 243 of 311	Appendix 3 Insurance Requirements	**(a)Cargo Insurance** i) For Domestic Bidder, Contract Price of First Contract + Contract Price of Second Contract excluding installation charges + 25% (to cover Price Variation and taxes & duties etc.) of First Contract Price.	We request NHPC to kindly this clause as under:- i) For Domestic Bidder, Contract Price of First Contract + Contract Price of Second Contract excluding installation charges + ~~25~~ **10**% (to cover Price Variation and taxes & duties etc.) of First Contract Price Kindly accept.	Please adhere to bid specifications.
54	Vol. V	Forms & Procedures Page 244 of 311	Appendix 3 Insurance Requirements	**(c)Third Party Liability Insurance** INR 100 Million per occurrence, unlimited no. of occurrence	The amount INR 100 Million per occurrence is on the higher side. Kindly consider reducing the limit. Further, kindly limit the aggregate liability for all occurences. As per our understanding it may not be possible to cover unlimited liability in Insurance. Kindly accept.	Please adhere to bid specifications.

No.	Volume	Document Reference	Clause No.	Original Language	Queries from Bidder	NHPC Reply
55	Vol. V	Forms & Procedures Page 254 of 311	Appendix 8 Functional Guarantees	**Clause 4 Failure in Guarantees & Liquidated Damages:** **Sub-Clause 4.3:** Subject to para. 4.2 above, the Contractor's aggregate liability to pay liquidated damages for failure to attain the functional guarantees shall not exceed twenty five percent (25 %) of the Contract price	As this 25% liability is on higher side, Kindly limit the cap on performance LD up to 15% of the Contract Price excluding all taxes & duties. Kindly accept	Please adhere to bid specifications.
56	Vol. V	Forms & Procedures Page 261 of 311	5. Bank Guarantee Form for Advance Payment Bank Guarantee	**Notes: 1.** (@) This date will be Ninety (90) days beyond the Defects liability period as specified in the Contract	Kindly note that there is a conflict of conditions between the **GCC Clause 13.2** & **Note:1** as mentioned here. While GCC clause says that the ABG shall be valid 90 days beyond the successful Completion of Facilities, the note mentions that the validity will be 90 days beyond DLP. We request that the note be modified in alignment with the GCC Clause on Advance Payment Security. Kindly confirm & accept	Please adhere to bid specifications.
57	Vol. V	Forms & Procedures Page 1 & Page 8 - 9 of 311	1. Bid Form Attachment -1 EMD Bank Guarantee	Bank Guarantee in Lieu of Earnest Money Deposit Bank Guarantee	Kindly note that after review of the Bank Guarantee (BG) formats as provided in the tender, most of the banks have suggested few changes (no material change). We have therefore suggested minimum changes in the BG Formats, which are attached herewith for your kind reference & acceptance. We request you to kindly accept th changes requested, as the scheduled banks are not ready to issue BGs without incorporating changes. Commented BG formats are attached herewith for your reference as **Annexure 4**	Please adhere to bid specifications.
		Forms & Procedures Page 255 - 257 of 311	Form 4 Performance Bank Guarantee	Performance Security Forms Bank - Bank Guarantee		Please adhere to bid specifications.
		Forms & Procedures Page 261 - 263 of 311	Form 5 Advance Bank Guarantee	Bank Guarantee Form for Advance Payment Bank Guarantee		Please adhere to bid specifications.
		Forms & Procedures Page 309 - 311 of 311	Form 18 Bank Guarantee	Bank Guarantee		Please adhere to bid specifications.

No.	Volume	Document Reference	Clause No.	Original Language	Queries from Bidder	NHPC Reply
58	Vol. V	Forms & Procedures Page 294 - 297 of 311	Form 14 Parent/Holding Company Agreement	**Reciatls Para 2:** WHEREAS on the Parent/Holding Company's commitment to provide full support for technical and financial requirements and be responsible and liable for successful completion of the works being awarded to M/s… **Recitals Para 3:** And whereas, in consideration of the aforesaid commitment, the Parent/Holding Company hereby enters into this agreement with the Employer for providing full support for technical and financial requirements to the Contractor and be responsible and liable for successful performance and completion of the works described in the said Contract on the following terms and conditions: **Conditions of Agreement - Clause 3 (a):** The Parent/Holding Company hereby agrees to the Employer to ensure due and faithful performance of the obligations and liabilities by the Contractor under the Contract and remain responsible to irrevocably and unconditionally provide full technical and financial support to the Contractor for completion of the works covered under the Contract. The provisions of Contract shall mutatis-mutandis apply to the Parent/Holding Company.	We request the following changes in the paragraphs & condition mentioned: **Reciatls Para 2**: WHEREAS on the Parent/Holding Company's commitment to provide full support for technical and**/or** financial requirements and be responsible and liable for successful completion of the works being awarded to M/s… **Recitals Para 3:** And whereas, in consideration of the aforesaid commitment, the Parent/Holding Company hereby enters into this agreement with the Employer for providing full support for technical and**/or** financial requirements to the Contractor and be responsible and liable for successful performance and completion of the works described in the said Contract on the following terms and conditions: **Conditions of Agreement - Clause 3 (a):** The Parent/Holding Company hereby agrees to the Employer to ensure due and faithful performance of the obligations and liabilities by the Contractor under the Contract and remain responsible to irrevocably and unconditionally provide full technical and**/or** financial support to the Contractor for completion of the works covered under the Contract. The provisions of Contract shall mutatis-mutandis apply to the Parent/Holding Company. Kindly accept.	Please adhere to bid specifications.

No.	Volume	Document Reference	Clause No.	Original Language	Queries from Bidder	NHPC Reply
				Request for insertion of new Clause on Limitation of Liability of the Parent/holding Company in the Agreement.	The extent of liability of the Parent/Holding Company under the Parent/Holding Company Agreement has not been expressly specified. We understand that the aggregate liability of the Parent/Holding Company and the Contractor under the said Agreement shall be governed by and read in conjunction with GCC Clause 30, including any applicable limitations of liability stipulated therein. Kindly confirm our understanding.	Please adhere to bid specifications.
59	Vol. V	Forms & Procedures Page 303 - 305 of 311	Form 16 Performance Guarantee BG	Performance Guarantee Form for Subsidiary Company (in lieu of Parent/Holding Company) Bank Guarantee the Contractor, for .....[Contract sum in figures and words] for .....[Name of the Work], a subsidiary of ..... [Name of the Parent/Holding Company] (hereinafter referred to as the "Parent/Holding Company"), which expression shall unless repugnant to the context or meaning thereof, include its successors administrators, executions & assigns), the said parent/holding company having agreed to enter into a separate Agreement No. ..... dated ..... with the Employer and also agreed to provide a Contract Performance Guarantee by Bidder (Subsidiary Company) for the faithful performance of the entire Contract by the Contractor equivalent to .....(*)..... of the value of the aforesaid work under the Contract to the Employer	Since the Contractor is issuing an additional PBG of 5% in lieu fo Parent Company, we request that all references to parent/holding Company be deleted, and the BG text be modified as under: the Contractor, for .....[Contract sum in figures and words] for .....[Name of the Work], ~~a subsidiary of ..... [Name of the Parent/Holding Company] (hereinafter referred to as the "Parent/Holding Company"), which expression shall unless repugnant to the context or meaning thereof, include its successors administrators, executions & assigns), the said parent/holding company having agreed to enter into a separate Agreement No. ..... dated ..... with the Employer~~ and ~~also~~ **the Contractor** agreed to provide a Contract Performance Guarantee ~~by Bidder (Subsidiary Company)~~ for the faithful performance of the entire Contract by the Contractor equivalent to .....(*)..... of the value of the aforesaid work under the Contract to the Employer Kindly accept.	Please adhere to bid specifications.

No.	Volume	Document Reference	Clause No.	Original Language	Queries from Bidder	NHPC Reply
				We, ... [Name & Address of the Bank] ..... having its Head Office at ..... (hereinafter referred to as the 'Bank', which expression shall, unless repugnant to the context or meaning thereof, include its successors, administrators, executors & assigns) do hereby guarantee and undertake to pay the Employer, on demand any and all monies payable by the Parent/Holding Company to the extent of .....(*)..... as aforesaid at any time up to ..... (@) ..... [day/month/year] without any demur, reservation, contest, recourse or protest and/or without any reference to the Contractor/Parent/holding company. Any such demand made by the Employer on the Bank shall be conclusive and binding notwithstanding any dfference between the Employer and the Parent/holding Company or any dispute pending before any Court, Tribunal, Arbitrator or any other authority. The Bank undertakes not to revoke this guarantee during its currency without previous consent of the Employer and further agrees that the guarantees herein contained shall continue to be enforceable till the Employer discharges this guarantee or till .....[days/month/year]whichever is earlier.	Since the Contractor is issuing an additional PBG of 5% in lieu fo Parent Company, we request that all references to parent/holding Company be deleted, and the BG text be modified as under: We, ... [Name & Address of the Bank] ..... having its Head Office at ..... (hereinafter referred to as the 'Bank', which expression shall, unless repugnant to the context or meaning thereof, include its successors, administrators, executors & assigns) do hereby guarantee and undertake to pay the Employer, on **receipt of your written** demand any and all monies payable ~~by the Parent/Holding Company~~ to the extent of .....(*)..... as aforesaid at any time up to ..... (@) ..... [day/month/year] without any demur, reservation, contest, recourse or protest and/or without any reference to the Contractor~~/Parent/holding company~~. Any such demand made by the Employer on the Bank shall be conclusive and binding notwithstanding any dfference between the Employer and the **Contractor** ~~Parent/holding Company~~ or any dispute pending before any Court, Tribunal, Arbitrator or any other authority. The Bank undertakes not to revoke this guarantee during its currency without previous consent of the Employer and further agrees that the guarantees herein contained shall continue to be enforceable till the Employer discharges this guarantee or till .....[days/month/year]whichever is earlier. Kindly accept	Please adhere to bid specifications.
				The Bank also agrees that the Employer at its option shall be entitled to enforce this Guarantee against the Bank as a principal debtor, in the first instance without proceeding against the Contractor/ Parent /holding Company and notwithstanding any security or other guarantee the Employer may have in relation to the Contractor's liabilities.	Since the Contractor is issuing an additional PBG of 5% in lieu fo Parent Company, we request that all references to parent/holding Company be deleted, and the BG text be modified as under: The Bank also agrees that the Employer at its option shall be entitled to enforce this Guarantee against the Bank as a principal debtor, in the first instance without proceeding against the Contractor~~/ Parent /holding Company~~ and notwithstanding any security or other guarantee the Employer may have in relation to the Contractor's liabilities. Kindly accept	Please adhere to bid specifications.
60				Building and Other Construction Workers Cess (BOCW)	We understand that BOCW cess shall only be applicable on Service portion prices. Kindly confirm.	Bid specifications are clear in this regard.Please adhere to bid specifications.

No.	Volume	Document Reference	Clause No.	Original Language	Queries from Bidder	NHPC Reply
	General			Security at Project site	Considering that the Project site is situated in Baramulla District, Kashmir region, Union Territory of Jammu & Kashmir, which may entail elevated security risks for site personnel, it is understood that adequate security measures and protection for the Contractor's staff, workmen, and other deployed personnel shall be arranged and provided by the Employer. Kindly confirm.	Please adhere to bid specifications.

LOT-III: ELECTRO-MECHANICAL WORKS OF URI-I STAGE-II HYDROELECTRIC PROJECT (240 MW) DISTRICT – BARAMULLA, UT OF J&K

INFORMATIVE REPLIES

Part-C

COMMERCIAL

Sr. No	Document	Clause No.	Clause	Rationale	NHPC Comment
1.	GCC	6.3	Subject to Sub-Clause 6.1 & 6.2 of these Conditions, unless settled amicably, any dispute or difference whatsoever arising between the parties and of or relating to the construction, interpretation, application, meaning, scope, operation or effect of this contract or the validity or the breach thereof, in respect of which the Independent Engineer's decision (if any) has not become final and binding shall be finally settled by Arbitration. Unless otherwise agreed by both Parties: ~~The claims not exceeding 25% of the Accepted Contract Amount can only be referred to arbitration and the Claims above 25% of the Accepted Contract Amount are to be referred to the commercial/ competent court.~~ Any dispute shall be settled by arbitration as set forth below: (i) A dispute with an Indian Contractor shall be finally settled by arbitration in accordance with the Indian Arbitration & Conciliation Act, 1996, or any statutory amendment thereof. The arbitral tribunal shall consist of 3 arbitrators, one each to be appointed by the Employer and the Contractor. The third Arbitrator shall be chosen by the two Arbitrators so appointed by the Parties and shall act as Presiding Arbitrator. In case of failure of the two arbitrators, appointed by the parties to reach upon a consensus within a period of 30 days from the appointment of the arbitrator appointed subsequently, the Presiding arbitrator shall be appointed by the President of the Institution of Engineers (India). For the purposes of this Sub- Clause, the term "Indian Contractor" means a contractor who is registered in India	We request the deletion of the clause requiring the deposit of 5% of the claim amount as a precondition to invoking arbitration. This requirement may create an undue financial burden on the claimant and can hinder access to a fair dispute resolution process. Furthermore, removing this clause would align the agreement more closely with widely accepted arbitration practices and ensure a more equitable dispute resolution mechanism for all parties involved.	Bid condition shall prevail. Please adhere to bid specifications.

			and is a juristic person created under Indian law as well as a joint venture between such a contractor and its joint venture Partner. (ii) Deleted (iii) Arbitration may be commenced prior to or after completion of the Works, provided that the obligations of the Employer, the Engineer, and the Contractor shall not be altered by reason of the arbitration being conducted during the progress of the Works. (iv) If one of the parties fail to appoint its arbitrator in pursuance of Sub-clause (i) above, within 30 days after receipt of the notice of appointment of its arbitrator by the other party, then the President of Institution of Engineers (India), both in cases of foreign contractors as well as Indian Contractors, shall appoint the arbitrator. A certified copy of the order of the President of Institution of Engineers (India), making such an appointment shall be furnished to each of the parties. (v) The decision of the majority of arbitrators shall be final and binding upon both parties. The cost and expenses of Arbitration shall be borne in such a manner as determined by the arbitral tribunal. The fee payable to arbitrators shall be as per the model fee structure of NHPC, the present model fee structure is placed as Annexure-D to GCC. The fees include the sitting fee of arbitrators, reading fee, award writing fee and secretarial expenses etc. and nothing is payable other than this by whatsoever name called. The cost and expenses of Arbitration proceedings will be borne by each party. However, the expenses incurred by each party in connection with the preparation, presentation etc. of its proceedings shall be borne by each party itself.		Bid condition shall prevail. Please adhere to bid specifications.

			The seat /place of Arbitration shall be Faridabad, India. ~~The party invoking arbitration shall have to deposit a sum equal to 5% of the amount claimed under dispute with the other party at the time of invocation of arbitration clause. The amount of 5% should be deposited in Demand Draft / NEFT / RTGS and no other security such as Bank Guarantee etc. will be accepted against this amount. The amount so deposited shall be adjusted against costs, if any, awarded by the Arbitral Tribunal against the claimant party and the balance remaining after such adjustment and in the absence of any such costs being awarded, the whole of the sum will be refunded to the party within one month from the date of the award. A simple interest @ 6% per annum shall be paid by the other party on the amount deposited by the party for referring the claim to arbitration.~~ Performance under the Contract shall continue during the arbitration proceedings and payments due to the Contractor by the owners shall not be withheld, unless they are the subject matter of the arbitration proceedings. The Arbitral Tribunal shall give a written reasoned Award and the final award by a majority of Arbitrators rendered in writing shall be binding upon the parties. Simple interest @ 6.0 % per annum shall be payable on the awarded amount of the dispute/claim for the pre reference and pendent lite period.		Bid condition shall prevail. Please adhere to bid specifications.
2.	GCC	9.1	The Contractor shall design, manufacture (including associated purchases and/or subcontracting), install and complete the Facilities with due care and diligence in accordance with the Contract. When completed, the Facilities should be fit for the purposes for which they are intended as defined in the Contract.		Bid condition shall prevail. Please adhere to bid specifications.

3.	GCC	14.4	For the purpose of the Contract, it is agreed that the Contract Price specified in Article 2 (Contract Price and Terms of Payment) of the Contract Agreement is based on the taxes, duties, levies and charges prevailing at the date twenty-eight (28) days prior to the last date of bid submission in the country where the Site is located (hereinafter called "Tax" in this GCC Sub-Clause 14.4). If any rates of Tax are increased or decreased, a new Tax is introduced, an existing Tax is abolished, or any change in interpretation or application of any Tax occurs in the course of the performance of Contract, which was or will be assessed on the Contractor, in connection with performance of the Contract, an equitable adjustment of the Contract Price shall be made to fully take into account any such change by addition to the Contract Price or deduction therefrom, as the case may be, in accordance with GCC Clause 36 (Change in Laws and Regulations) hereof. ~~However, these adjustments would be restricted to direct transactions between the Employer and the Contractor and not on procurement of raw materials, intermediary components etc. by the Contractor.~~	Certain procurement from sub-contractors are only in relation to the project and these should be also treated as direct transaction between Employer and the Contractor	Bid condition shall prevail. Please adhere to bid specifications.
4.	GCC	16.4	The above provisions of this GCC Clause 16 shall supersede ~~not in any way modify any undertaking of confidentiality given by either of the Parties hereto prior to the date of the Contract in respect of the Facilities or any part thereof.~~	Any confidentiality related undertaking between the Employer and Contractor prior to the date of the contract shall form a part of the contract.	Bid condition shall prevail. Please adhere to bid specifications.
5.	GCC	21.3.4	The Contractor shall be responsible for obtaining, if necessary, approvals from the authorities for transportation of the Plant and	Any damage during the process of transportation	Bid condition shall prevail. Please adhere to bid specifications.
			Equipment and the Contractor's Equipment to the Site. The Employer shall use its best endeavours in a timely and expeditious manner to assist the Contractor in obtaining such approvals, if requested by the Contractor. The Contractor shall indemnify and hold harmless the Employer from and against any third party claim for damage to roads, bridges or any other traffic facilities that may be caused by the transport of the Plant and Equipment and the Contractor's Equipment to the Site, provided such damage is attributable solely to the negligence of the Contractor.	shall be limited to incidents attributable solely to negligence by the contractor in relation to transportation.	

6.	GCC	22.1.1	If, at any time during the progress of installation of the Facilities, any error shall appear in the position, level or alignment of the Facilities, the Contractor shall forthwith notify the Engineer In- Charge of such error and, at its own expense, immediately rectify such error to the reasonable satisfaction of the Engineer In-Charge. If such error is based on incorrect data provided in writing by or on behalf of the Employer or works which was under the scope of the Employer or any of its sub-contractors and cannot be attributed to the Contractor, the expense of rectifying the same shall be borne by the Employer.		Bid condition shall prevail. Please adhere to bid specifications.
7.	GCC	22.6.2	Clearance of Site after Completion: After Completion of all parts of the Facilities, the Contractor shall clear away and remove all wreckage, rubbish and debris of any kind with relation to the work carried out by the Contractor from the Site, and shall leave the Site and Facilities in a clean and safe condition.	This responsibility shall be limited only to the debris etc that were a product of the works of the Contractor.	Bid condition shall prevail. Please adhere to bid specifications.
8.	GCC	26.2	However, the payment of liquidated damages shall not in any way relieve the Contractor from any of its obligations to complete the Facilities or from any other obligations and liabilities of the Contractor under the Contrac t.	This exception to relief liquidated damage shall only be limited.	Bid condition shall prevail. Please adhere to bid specifications.
9.	GCC	27.2	The Defect Liability Period shall be ~~thirty six (36) twenty four (24) months from the date of issue of Taking Over Certificate of the generating unit which is commissioned first or twenty four (24) eighteen (18) months from the date of delivery issue of Taking Over Certificate of the generating unit which is commissioned last whichever happe ns earlier.~~		Bid condition shall prevail. Please adhere to bid specifications.
10.	GCC	27.2	The Contractor shall not be responsible for the repair, replacement or making good of any defect or of any damage to the Facilities arising out of or resulting from any of the following causes: (a) improper operation or maintenance of the Facilities by the Employer (b) operation of the Facilities outside specifications provided in the Contract (c) normal wear and tear (d) erosion and corrosion.	Erosion and corrosion should be an exclusion in hydro projects	Bid condition shall prevail. Please adhere to bid specifications.

11.	GCC	27.4	The Employer shall give the Contractor a notice stating the nature of any such defect together with all available evidence thereof, promptly following the discovery thereof (in no case not more than 30 days following the date of such discovery). The Employer shall afford all reasonable opportunity for the Contractor to inspect any such defect.	A specific timeline for providing such notice is necessary for the purpose of contract administration	Please adhere to bid specifications.
12.	GCC	27.8.1	At the end of the Defect Liability Period, the Contractor's liability ceases except for latent defects. The Contractor's liability for latent defects warranty shall be limited to a period of 3 Years ~~five (5) years [suggest a shorter time frame] from the end of Defect Liability Period. For the purpose of this clause, the latent defects shall be the defects inherently lying within the material or arising out of design deficiency, which do not manifest themselves during the Defect Liability Period defined in this GCC Clause 27, but later.~~	Latent DLP of years post expiration of DLP since inherent defects from materials and design can be ascertained at the earlier stage and during DLP itself.	Bid condition shall prevail. Please adhere to bid specifications.
13.	GCC	27.8.2	The express warranties Contractor makes in this clause are the only warranties it will make. There are no other warranties or conditions, whether statutory, oral, express or implied. In particular, there are no implied warranties of merchantability or fitness for a particular purpose.		Bid condition shall prevail. Please adhere to bid specifications.
14.	GCC	27.10	In addition, the Contractor shall also provide a warranty for a period of 2 years for all painting, (Ref. Clause 4.10.4.3 of the General Technical Specifications) of any such component of the Facilities and during the period of time as may be specified in the Technical Specifications.		Bid condition shall prevail. Please adhere to bid specifications.
15.	GCC	28.2	If, for reasons attributable to the Contractor, the minimum level of the Functional Guarantees specified in Appendix 8 (Functional Guarantees) to the Contract Agreement are not met either in whole or in part, the Contractor shall at its cost and expense make such changes, modifications and/or additions to the Plant or any part thereof as may be necessary to meet at least the minimum level of such Guarantees. The Contractor shall notify the Employer upon completion of the necessary changes, modifications and/or additions, and shall request the Employer to repeat the Guarantee Test until the minimum level of the Guarantees has been met. If the Contractor eventually fails to meet the minimum level of Functional Guarantees, the Employer may consider termination of the Contract pursuant to GCC Sub- Clause 42.2.2 ~~and recover the payments already made to the Contractor.~~		Bid condition shall prevail. Please adhere to bid specifications.

16.	GCC	29.1	The Contractor shall, subject to the Employer's compliance with GCC Sub-Clause 29.2, indemnify and hold harmless the Employer and its employees and officers from and against any and all ~~suits, actions or administrative proceedings, claims, demands, losses, damages, costs, and expenses of whatsoever nature, including attorney's fees and expenses third party claims, which the Employer may suffer as a result of any infringement or alleged~~		Bid condition shall prevail. Please adhere to bid specifications.
			infringement of any patent, utility model, registered design, trademark, copyright or other intellectual property right registered or otherwise existing at the date of the Contract by reason of: (a) the installation of the Facilities by the Contractor or the use of the Facilities in the country where the Site is located; and (b) the sale of the products produced by the Facilities in any country.		Bid condition shall prevail. Please adhere to bid specifications.
17.	GCC	29.3	The Employer shall indemnify and hold harmless the Contractor and its employees, officers and Subcontractors from and against any and all ~~suits, actions or administrative proceedings, claims, demands, losses, damages, costs, and expenses of whatsoever nature, including attorney's fees and expenses third party claims, which the Contractor may suffer as a result of any infringement or alleged infringement of any patent, utility model, registered design, trademark, copyright or other intellectual property right registered or otherwise existing at the date of the Contract arising out of or in connection with any design, data, drawing, specification, or other documents or materials provided or designed by or on behalf of the Employer.~~		Bid condition shall prevail. Please adhere to bid specifications.
18.	GCC	30.1 (a)	Neither Party shall be liable to the other Party, whether in contract, tort, or otherwise, for any indirect or consequential loss or damage, loss of use, loss of production, or loss of profits or interest costs, which may be suffered by the other Party in connection with the Contract, ~~other than specifically provided as any obligation of the Party in the Contract, and~~		Bid condition shall prevail. Please adhere to bid specifications.
19.	GCC	30.1 (b)	the aggregate liability of the Contractor to the Employer, whether under the Contract, in tort or otherwise, shall not exceed the total Contract Price, provided that this limitation shall not apply ~~to the cost of repairing or replacing defective equipment, or to any obligation of the Contractor to indemnify the Employer with respect to patent infringement.~~		Bid condition shall prevail. Please adhere to bid specifications.

20.	GCC	31.2	Ownership of the Plant and Equipment (including spare parts) procured in the country where the Site is located shall be transferred to the Employer when the total Contract Price has been paid by the Employer to the Contractor ~~Plant and Equipment are loaded on to the mode of transport to be used to convey the plant and equipment from the works to the site and upon endorsement of dispatch documents in favour of the Employer.~~		Bid condition shall prevail. Please adhere to bid specifications.
21.	GCC	33.1	Subject to GCC Sub-Clause 33.3, the Contractor shall indemnify and hold harmless the Employer and its employees and officers from and against any and all third party claims ~~suits, actions or administrative proceedings, claims, demands, losses, damages, costs and expenses of whatsoever nature, including attorney's fees and expenses, in respect of the death or injury of any person or loss of or damage to any property (other than the Facilities whether accepted or not), arising in connection with the supply and installation of the Facilities and by reason of the negligence of the Contractor or its Subcontractors, or their employees, officers or agents, except any injury, death or property damage caused by the negligence of the Employer, its contractors, employees, officers or agents.~~		Bid condition shall prevail. Please adhere to bid specifications.
22.	GCC	35.1	If, during the execution of the Contract, the Contractor shall encounter on the Site any physical conditions ~~(other than climatic conditions) or artificial obstructions that could not have been reasonably foreseen prior to the date of the Contract Agreement by an experienced contractor on the basis of reasonable examination of the data relating to the Facilities provided by the Employer, and on the basis of information that it could have obtained from a visual inspection of the Site (if access thereto was available) or other data readily available to it relating to the Facilities, and if the Contractor determines that it will in~~	Climatic conditions might affect the physical conditions at the Site	Bid condition shall prevail. Please adhere to bid specifications.
			consequence of such conditions or obstructions incur additional cost and expense or require additional time to perform its obligations under the Contract that would not have been required if such physical conditions or artificial obstructions had not been encountered, the Contractor shall promptly, and before performing additional work or using additional Plant and Equipment or Contractor's Equipment, notify the Engineer-in-charge in writing of		Bid condition shall prevail. Please adhere to bid specifications.

23.	GCC	36.1	If, after the date twenty-eight (28) days prior to the last date of Bid submission, in the country where the Site is located, any law, regulation, ordinance, technical standards, order or by law having the force of law is enacted, promulgated, abrogated or changed (which shall be deemed to include any change in interpretation or application by the competent authorities) that subsequently affects the costs and expenses of the Contractor and/or the Time for Completion, the Contract Price shall be correspondingly increased or decreased, and/or the Time for Completion shall be reasonably adjusted to the extent that the Contractor has thereby been affected in the performance of any of its obligations under the Contract. Further, the change in the rates of corresponding HSN / SA Code shall only be considered for reimbursement / adjustment under this clause. However, these adjustments would be restricted to ~~direct transactions between the Employer and the Contractor and not on procurement of raw materials, intermediary components etc. by the Contractor.~~		Bid condition shall prevail. Please adhere to bid specifications.
24.	GCC	37.1 (e)	Acts of God (such as, but not limited to earthquake ~~(above magnitude of 7 of Richter Scale), any natural calamity as notified by Government of India viz. epidemic, pandemic, spread of virus (corona virus in instant case) beyond human control, lightning, unprecedented floods, as notified by Government of India.~~		Bid condition shall prevail. Please adhere to bid specifications.
25.	GCC	39.2.7	If the Employer and the Contractor cannot reach agreement on the price for the Change, an equitable adjustment to the Time for Completion, or any other matters identified in the Change Proposal, the Employer may nevertheless instruct the Contractor to proceed with the Change by issue of a "Pending Agreement Change Order." Upon receipt of a Pending Agreement Change Order, the Contractor shall immediately proceed with effecting the Changes covered by such Order as long as the Contractor's pre-estimate for such variation does not exceed fifteen percent (15%) of the Contract Price. The Parties shall thereafter attempt to reach agreement on the outstanding issues under the Change Proposal. If the Parties cannot reach agreement within sixty (60) days from the date of issue of the Pending Agreement Change Order, then the matter shall ~~may be resolved in accordance with GCC Clause 6.~~		Bid condition shall prevail. Please adhere to bid specifications.
26.	SCC	5.7	The Contractor shall provide free of cost to the Employer all the engineering data, drawing and descriptive materials submitted with the bid, in six (6) copies to form a part of the Contract immediately after Notification of Award.		Bid condition shall prevail. Please adhere to bid specifications.

27.	SCC	17	"Employment of foreign personnel: The Employer will evaluate and determine the optimum number of foreign employees required to be deployed at the Site, if any, or sub- contracted to a foreign company, if applicable, keeping in view the requirements of Facilities, location and technical necessities. The number of foreign employees would be kept to the minimum and shall be limited to only technical/ supervisory staff. Foreign employees would ordinarily be expected to confine their stay and movements to the designated place of stay and Site. Any visits outside the Site in any restricted/ protected areas would only be undertaken with permission of the competent authority, failing		Bid condition shall prevail. Please adhere to bid specifications.
			which they will be liable to action as per prevalent rules and policy of Govt. of India. If the foreign employees of the Company are found indulging in activities prejudicial to India's national security interest, then the Employer may terminate the Contract by providing a notice of []days to the Contractor ~~without any liability under GCC clause 42.2."~~		Bid condition shall prevail. Please adhere to bid specifications.
28.		18	If the effective steps to repair, modification or replacement of defects, deficiencies or damages are beyond the scope of expertise available at site, the employer shall notify the same to the Contractor. In such case if effective steps to repair, modification or replacement of defects, deficiencies or damages are not taken within ~~seven [] days of the date of notification thereof by the employer to the contractor, or, if such repair, modification or replacement is not completed with reasonable promptitude by the contractor at its own expense, as required by the Employer in accordance with this Article, the Employer shall be entitled, to cause the same, to be made good by other agencies or otherwise and deduct expenses (of which the certificate of Employer shall be final) from any sum that may by then or at any time thereafter becomes due to the contractor under the Contract or from the amount released by encashing bank guarantees provided by the Contractor under the contract or recover otherwise from the contractor including any money due to the contractor on any account whatsoever.~~		Bid condition shall prevail. Please adhere to bid specifications.
29.		20	If the Central Vigilance Commission, Central Bureau of Investigation or any other Central Government investigation Agency recommends such a course in respect of a case under investigation or improper conduct on agency's part in matters relating to the Company (NHPC) ~~or even otherwise~~		Bid condition shall prevail. Please adhere to bid specifications.

30.		22	The Contractor shall depute/ ensure availability of expert as defined in Cl. 14.1.9(iii) of Particular Technical Specification (PTS). The		Bid condition shall prevail. Please adhere to bid specifications.
			penalty (as provided in Cl. 14.4.1 of Particular Technical Specification (PTS)) shall be imposed for every incidence of fault related to Control, Monitoring and SCADA which is not attended/rectified within mutually agreed time ~~Three (3) hours after occurrence of the fault specifically for running of each unit. The penalty shall be deducted from any sum that may by then or at any time thereafter becomes due to the Contractor under the Contract or from the amount released by encashing bank guarantees provided by the Contractor under the contract or recover otherwise from the contractor including any money due to the contractor on any account whatsoever.~~		
31.	SCC	23(j)	Contractor shall endeavour to employ maximum number of local people in not only un-skilled and semiskilled category ~~but also in semiskilled and skilled categories by imparting skills through training to selected locals. Detailed plan regarding this should be submitted by the Contractor within two[] months from the Commencement Date.~~		Bid condition shall prevail. Please adhere to bid specifications.
32.	PTS		Liquidated damages for shortfall in output and efficiency For any shortfall in the tested values of rated output and the weighted average efficiency of turbine vis-à-vis the corresponding guaranteed values respectively, shall be computed as follows: A) Output For each one tenth of one percent (0.1%) of rated output of 3,328,900 not less than 121.827 MW at a net head of 227.0 m vis-à-vis corresponding guaranteed value @ INR shortfall in tested value B) Weighted average efficiency		Bid condition shall prevail. Please adhere to bid specifications.
			For each one tenth of one percent (0.1%) shortfall in tested value of weighted average efficiency vis-à vis corresponding guaranteed value @ INR 3,328,900		Please refer Informative replies-Technical

			For fractional values of shortfalls in percentage, the liquidated damages amount will be computed on pro-rata basis. The guaranteed efficiency figure shall be quoted upto “1” decimal places. In case any bidder has quoted in two decimals points, then value at second decimal point shall not be considered. The liquidated damages on account of shortfall of output and weighted average efficiency shall be computed separately. The total amount of liquidated damages shall be the sum of these two multiplied by number of turbines.		

Note: For ease of reference, the Contractor has utilized strikethrough to indicate the clauses that need deletion and bold text to highlight the new additions.

NHPC Limited
URI-I STAGE-II HYDROELECTRIC PROJECT (240 MW)
Tender Specification No.: NH/Conts(EnM)-III/Uri-I Stage-II/ENM/2026/01 INFORMATIVE REPLIES (Technical Query)-Part-A

Sl. No.	Volume	Page No.	Clause No.	Tender Provision	Queries / Clarification	NHPC REPLY
				Turbine/MIV		
1	III B (PTS)	pg 95 of 640	4.1.1 Spherical valve & associated components	1) Two (2) sets of 2.8 m diameter turbine mail inlet valves…	Please allow that main inlet valve diameter shall be as per bidder design and in line with spiral inlet diameter. Kindly confirm.	Tender provisions are clear in this regard.
2	III B (PTS)	pg 32 of 640	2.4.3	Cavitation pitting guarantees: "------ subsequent to repair----guarantees for another period of 8000 ----"	Measure of extent of damage due to Cavitation and minor / major repairs should be govern by IEC 60609 . This is a regular International practice & followed in almost all the hydro tenders and accepted universally. Kindly accept & confirm.	Tender provisions are clear in this regard.
3	III A (GTS)	70 of 1070	3	Required documents for the E&M equipments.	We shall provide all the arrangement/assembly drawings along with the basic design calculations. However, we cannot provide the machining drawings & part drawings of Turbine (sr. no.2) & MIV (sr. no-4) asked in clause 3 (Specific Documents for all E&M Equipment), as these are proprietary in nature. Kindly accept.	Tender provisions are clear in this regard.
4	III B (PTS)		General	Minimum turbine output at Rated Head	We understand that range of safe operation of turbine shall be from 50 % to 110 % of rated output at rated head. Kindly confirm.	Tender provisions are clear in this regard.
				Governing		
5	IIIB (PTS) – Turbine and Accessories	2-6	2..3.3	**Pressure rise and speed rise: -** Pressure rise-29% of static head	As per IS 12837:1989 for V. Francis turbine, Pressure rise-30-35%, Please review and clarify.	Kindly adhere to tender specification.
6	IIIB (PTS) – Turbine and Accessories	2-32	2.5.8.1	**Instrumentation** 3 e. Turbine Bearing oil relay 3 f. Capacitive type oil level controller	Instead of capacitive type, we propose Magnetostrictive / Guided Wave Radar type level controller. "3.e and 3. F" shall be in same assembly. Kindly confirm acceptance.	Kindly refer amendment.
7	IIIB (PTS) – Turbine and Accessories	2-33	2.5.8.1	**Instrumentation** 4 a. Guide vane position indicator- LVDT	MLDT (Magnetostrictive linear displacement transducer) type electronic position feedback sensor shall be provided for Guide vane servomotor position feedback. Kindly confirm acceptance.	Kindly refer amendment.

Sl. No.	Volume	Page No.	Clause No.	Tender Provision	Queries / Clarification	NHPC REPLY
8	IIIB (PTS) – Turbine and Accessories	2-34	2.5.8.6	**Ultrasonic flow measurement system: -** The equipment shall be as per IEC 60041. The flow metering system shall drive data from four (4) sets (8 sensors) of transducer paths or more, to achieve the accuracy ±0.5%.	As per the tender drawings, suitable location for mounting of Ultrasonic Sensors is not available as the penstock portion between MIV & Power house is concreted. Provided niche (2500x600) before power house is not sufficient. For Installation of Ultrasonic sensors from outside, we need minimum 5-meter un-concreted length of penstock. Throughout this un-concreted length 2-meter free & clear space would be required around it's periphery. During installation this space would be used for movement of man & machine, later on, the same shall be used for maintenance purpose. Near D line of the Power House Nitch/opening/stair case shall be required to access this open space. Further, it is to be noted that at the upstream side of this open space straight length of Penstock should be of 5D and in the downstream side straight length should be 3D (where D= diameter of the Penstock). Kindly confirm acceptance.	Tender provisions are clear in this regard.

Sl. No.	Volume	Page No.	Clause No.	Tender Provision	Queries / Clarification	NHPC REPLY
9	IIIB (PTS) – Digital Governing system and Accessories	3-15	3.5.4	Governor Local Control panel includes Servo position controller, HMI, redundant 220V DC power supply	HMI & redundant 220V DC power supply shall be part of Digital Governor panel, however Servo position controller i.e. Servo proportional valve shall be part of Hydro mechanical cabinet. Kindly confirm acceptance.	Tender provisions are clear in this regard.
10	IIIB (PTS) – Digital Governing system and Accessories	3-16	3.5.4.5	**Control and Indication –** 4) Indicating lights - The following indicating lights shall be mounted on the front face of the localcabinet /Unitcontrolboards i) Servomotor gate lock 'on' or off indication ii) Generator brake switch in 'Auto' position. iii) Generator brake 'on' or 'off' indication iv) Actuator lock 'on' v) Auto/ manual, light on indicate, "auto" or "manual" vi) Speed failure indication light vii) Governor electronic power supply test and failure indication viii) Inlet valve position, full open and full closed positions.	The indicating lights shall be mounted on various panels as per their system application as under; (i) Servomotor gate lock indication – UCB (ii) Generator brake switch in auto position- UCB (iii) Gen brake on/off indication – UCB (iv) Actuator lock 'on' – Not Applicable (v) Auto / Manual indication – EHGC (Governor Electronic Panel) (vi) Speed sensor failure indication – EHGC (Governor Electronic Panel) (vii) Gov. fault indication – EHGC (Governor Electronic Panel) (viii) Gov. power supply fail indication- EHGC (Governor Electronic Panel) (ix) Inlet valve position – UCB Kindly confirm acceptance.	Tender provisions are clear in this regard.
11	IIIB (PTS) – Digital Governing system and Accessories	3-17	3.5.4.5	**E) In addition to above, the following controls & instruments shall also be including in the governing system** 1) Gate position & gate limit control and indication A mechanical gate limit indicator and gate position indicator shall be provided on local control panel. These indicators shall be designed for field adjustment to obtain correct indication of turbine gate position.	As per Bidder's standard design, Gate position indicator shall be provided on Local control panel (HMC panel) and Gate Limit indicator shall be provided in HMI (of EHGC panel). Kindly confirm acceptance.	Tender provisions are clear in this regard.
12	IIIB (PTS) – Digital Governing system and Accessories	3-21	3.5.7	**Oil Pressure system: -** The oil pressure system shall consist of a sump tank, two (2) A.C. motor driven screw / vane /piston pumps and one jockey pump of suitable capacity, if required and pipes, fittings etc.	In addition to screw / vane /Piston pumps, we propose gear pumps also. Kindly confirm acceptance.	Kindly adhere to tender specification.
	IIIB (PTS) – Main Inlet Valve	4-12	4.5.11.1	**Oil Pressure System-General: -** The oil pressure system shall consist of a sump tank, two (2) A.C. motor driven screw / vane /Piston pumps of suitable capacity, pipes, fittings etc.		
		4-13	4.5.11.3	**Oil pumps** Each main and standby oil pump shall be of the screw / vane / Piston type, with a capacity (l/ minute) as per IEEE125		

Sl. No.	Volume	Page No.	Clause No.	Tender Provision	Queries / Clarification	NHPC REPLY
13	IIIB (PTS) – Digital Governing system and Accessories	3-23	3.5.7.4	**Oil Sump Tank** Magnetic oil level gauge…..marked with low and high level marks, complete with both hand shut off valves and automatic means of shutting off oil discharge in the event of breakage.	1.Sight glass gauges shall be provided for Oil sump tank level local ndication. Magnetic oil level gauges shall not be provided for Oil sump tank. 2. Only return line filter element (40/50-micron capacity) for PP Set shall be of cleanable type. Pressure filter element (10-micron capacity) provided in the Governor Hydro-mechanical Cabinet/ Hydraulic Control Panel shall not be re-usable type. Filter manufacturers offer filer elements as stated above only. 3. As standard practice, filter not provided in pump discharge line. Kindly confirm acceptance. .	1. Kindly refer amendment. 2. Tender provisions are clear in this regard. 3. Tender provisions are clear in this regard.
	IIIB (PTS) – Main Inlet Valve	4-14	4.5.11.4	**(A) Proportional valve oil filtering –** Dual on line filter……..in actuator supply circuit. Filter elements used shall be cleanable with petrol. **(B) Main Circuit oil filtering** One oil Filter shall be provided in the pumps discharge line. …. Filter elements used shall be cleanable with petrol.		
14	IIIB (PTS) – Main Inlet Valve and Accessories	3-24	3.5.8	**Oil Pressure Accumulator** 3.5.8.3 Construction and safety features The Piston accumulator shall be constructed from plate steel conforming to EN 10028-3 P355NL1 or equivalent in accordance with part UW of the ASME Code for Unfired Pressure Vessels, Section VIII, for the maximum working pressure of the governing system. The accumulator shall be equipped with …..pressure transducer, Oil level sight gauges, metallic magnetic float pipe type with indication….. The sight gauges shall be long enough to overlap the high and low levels by atleast 50mm. **a) One oil pressure transmitter with contact switch** **Oil pressure accumulator** The Piston accumulator shall be constructed from plate steel…. The accumulator shall be equipped with …..pressure transducer, Oil level sight gauges, metallic magnetic float pipe type with indication….. The sight gauges shall be long enough to overlap the high and low levels by atleast 50mm.	1. Horn tubes of suitable pressure ratings shall be used for construction of Piston accumulators. 2. Piston accumulator assembly shall be equipped with pressure gauge, magnetic flapper type level gauge, level switches and Level transmitter. Due to safety, Sight gauges are not installed on pressure accumulator. 3. Pressure transmitter is provided in oil pipe line outside Piston accumulator assembly and pressure switch is provided in PP set. Kindly confirm acceptance.	1 & 2) Kindly refer amendment. 3) Shall be dealt during detail engineering.
15	IIIB (PTS) – Digital Governing system and Accessories	3-26	3.6.3	**Design calculation** Structural analysis of different parts of governor such as Accumulator, sump tank	Sizing calculations of OPU sub-systems i.e. Piston accumulator, sump tank etc shall be provided. Kindly confirm acceptance.	Tender provisions are clear in this regard.

Sl. No.	Volume	Page No.	Clause No.	Tender Provision	Queries / Clarification	NHPC REPLY
16	Uri HEP Volume-IIIB (PTS) – Main Inlet Valve and Accessories	3-26	3.8	**Spare parts** 10) Set of micro oil filter of each type used in the electro-hydraulic actuator: 4 Nos. of each type 11) Set of oil/ air filters/Moisture breather of each type used in oil sump tank: 1 no. of each type Spare parts 5) Set of Oil filters of each type used in the electro hydraulic actuator and pumping set (except pump suction filter) : 4 Nos. of each type	Complete filter as spare not required for GOV/MIV OPU systems, filter need not be replaced. Only the filter elements are required to be changed. Hence, only filter elements shall be considered for GOV/MIV OPU systems. Kindly confirm acceptance.	Kindly refer amendment.
				7) Sight gauge assembly for accumulator and sump tank: 2 nos. of each type	Sight gauge assembly not applicable for Pressure accumulator and hence shall not be considered. Magnetic level gauges as applicable for Pressure accumulator shall be considered. Kindly confirm acceptance.	Kindly refer amendment
17	IIIB (PTS) – Main Inlet Valve and Accessories	4-15	4.5.12	**Oil Pressure Accumulator:-** 4.5.12.1 The size of accumulator shall be such that it shall be possible to operate the Main inlet valve 3 times (2"C"+1"O")	We propose for 1 "C"+1"O" only to optimise size of Oil Pressure System. Kindly confirm acceptance.	Kindly adhere to tender specification.
18	IIIB (PTS) – Main Inlet Valve and Accessories	4-21	4.8	Spare Parts: - 22. Transducers assemblies complete of all type used in the system	These items are not applicable in control mechanism of MIV. Kindly review and delete the requirement.	Kindly adhere to tender specification.
19	IIIB (PTS) – Oil Handling System	30-3	30.3.2	**Lubrication oil handling system: -** The purifier shall be capable of processing the lubricating oil on not more than two (2) passes basis.	Lubrication oil purifying plant cannot bring down the moisture content in the range of 50 ppm in 2 passes. It should be allowed in multiple passes. Kindly confirm acceptance.	Kindly adhere to tender specification.
	SPECIAL SOFTWARE					
20	III B (PTS)	1-20	1.11.4 Special software	Special software	Being an EM bidder, it will be very difficult to procure any type of software and provide the same to Employer , Hence, Employer is requested to kindly exclude this requirement from scope of EM bidder.	Kindly adhere to tender specification.
21	IIIB (PTS), GENERAL TECHNICAL REQUIREMENTS	1-21	1.11.4	(i). Electrical engineering Design, simulation and analysis Software covering the features for Load Flow-Analysis…. The software should be preloaded with all functional system libraries wizards etc. to carry out the above mentioned studies with min 500 buses and two network licences. (ii) Simulation and design Software tool for designing of Hydro Power units / turbines having following capabilities…… The software should have the ability to include all the above components into simulation. (iii) 2D and 3D Computer aided design software for preparation and review of drawings for approval.	Please inform the following: - Stand alone/ Network Licence required. Please share the number of computer (where the software to be installed) for standalone licence. - Number of Licence required. - License subscription period (i.e. for One year/ three years/ perpetual)	For (i) & (iii), Two (02) numbers of Prepetual Network Licence is required. Item at (ii) is deleted, kindly refer amendment in this regard.

Sl. No.	Volume	Page No.	Clause No.	Tender Provision	Queries / Clarification	NHPC REPLY
	Generator Circuit Breaker (GCB)					
22	**IIIB (PTS)**	**---**	**3.5.3.2, 5.5.10.1 6.5.4, 6.5.6 , 14.5.3, 14.5.5.3, 15.6.4.4**	GCB/ Generator Circuit Breaker has been mentioned in various clauses in the tender documents. MV SWITCHGEAR , UTT AND GCB is mentioned in the package content list (VOLUME – III C, TDS)	No detailed specification/ scope for GCB (Generator Circuit Breaker) has been found in the tender documents/ Drawings/ Single Line Diagram. As such we understand that there is **no requirement of GCB** (Generator Circuit Breaker) for this tender & the GCB (if any) shall be not in bidder's scope. **Kindly confirm acceptance.**	GCB/ Generator Circuit Breaker may be read as "Unit / Main circuit breaker"
	CONTROL AND MONITORING SYSTEM (Chapter-14)					
23	**IIIB (PTS) Chapter- 14**	**14-3**	**14.1.4 14.1.5**	Link between URI I and URI I stage 2 Power House - OFC terminal equipment for the ends. The link shall be envisaged through two ADSS fibres Optic cables, each of 12 cores to be laid between Power House of URI I stage 1 and URI I stage 2 including supply of necessary pipes for laying.. ADSS optical fibre link shall be provided for connection between Power House and administrating building in colony & Power house and automaic weather station (to be located outside power house cavern either near MAT entrance or near DG area, exact location to be decided during detailed engineering.	Please inform the route length between Power House of URI I stage-1 and URI I stage-2. If ADSS OFC has been envisaged for connection from Power House of URI I stage-1 and URI I stage-2, then whether any existing line is available to install ADSS cable (if yes, please provide route length, no, of poles etc.). If new poles to be erected , please provide pole specification and clarify the scope of poles. Kindly inform us the route length between Power House and administrating building & route length between Power house and automatic weather station or near DG area.	Provision made in the tender specification is clear in this regard. However, tentative route length between control rooms of URI I stage-1 and URI I stage-2 is approx. 600 meter and tentative route length for connection between Power House and administrating building in colony & Power house and automaic weather station is approx. 10 kms. The above lenghts are tentative & shall be finalised during detail engineering.
	LV Switchgears (Chapter-19)					
24	**IIIB (PTS) Chapter- 19**	**19-3**	**19.2.1**	Provision of coupling shall be made between SSB # 1 & SSB # 2 through LV duct, between SSB#1 to UAB#1 and SSB#2 to UAB#2 through LT power cable/ LV duct for meeting the requirement of redundant power.	We shall be considering LT power cable for interconnection between SSB#1 to UAB#1 and SSB#2 to UAB#2. **Please confirm the acceptance of LT power cables.**	Tender provisions are clear in this regard.
25	**IIIB (PTS) Chapter- 19**	**19-16**	**19.5.9.1**	The bus-bar in the LV bus-duct shall be Copper/ Aluminium 415V, 3-Ph, 4 wire, 50 Hz, self cooled compact sandwich type.	We shall be considering Aluminium bus-ducts for interconnection between UATs to UABs and SATs to SSBs, as there is a huge price difference between copper bus-duct and aluminum bus-duct. **Please confirm the acceptance of Aluminum LV bus-duct.**	Tender provisions are clear in this regard.
26	**IIIB (PTS) Chapter- 19**	**19-13**	**19.5.4.1**	The motor for operating the spring loading device shall be for 220 V DC supply. The closing and tripping coils shall be for 220 V DC.	As per tender document, 220V DC is not asked/available in TRT and Surge Shaft area. Please confirm the acceptance of 230V AC 1-PH supply for the controls of LT panels of TRT & Surge shaft area.	Shall be dealt during detail engineering
	Starter Panel/ Motor Starting Equipment					
27	**IIIB (PTS), Chapter-3**	**3-22 3-23**	**3.5.7.3**	Oil Pumps - Motor starter shall be equipped with variable frequency drive for soft starting.	VFD function is not required (also not advisable) for Gov. OPU system/drainage/CW system. As such, soft starter shall be provided for motor ratings above 50kW. **Kindly confirm the acceptance of soft starters in place of VFD.**	Motor Starter shall be VFD/Static type soft starter
	Bus Duct					
28	**III B (PTS)**	**7-2**	**7.2.1**	Necessary cooling arrangement shall be provided for the busduct by the contractor according to the requirement.	Busduct shall be naturally cooled. No separate cooling arrangement shall be provided for busduct. Kindly confirm acceptance.	Tender provisions are clear in this regard.
29	**III B (PTS)**	**7-4**	**7.5.2**	The degree of protection of enclosure shall be IP-55.	Degree of protection test (Air and water tightness test) shall be carried out as per appendix F of IS-8084. Kindly confirm acceptance.	Kindly adhere to tender specification.

Sl. No.	Volume	Page No.	Clause No.	Tender Provision	Queries / Clarification	NHPC REPLY
				Generator Transformer and Dry Type Transformer		
30	III B (PTS) Section-8, GSU TRANSFORMERS	08-12	8.5.8.1 (II)	A suitable differential pressure gauge or equivalent suitable device fitted with electrical contacts to give an alarm in case of choking of coolers.	Differential pressure gauge is provided in cooler to detect mixing of water in oil in case of a leakage. In case of leakage in a double tube cooler, water is not mixed with oil, instead the leaked water is collected separately to give alarm and as such differential pressure gauge is not required for double tube cooler. Kindly confirm.	Tender provisions are clear in this regard.
31	III B (PTS) Section-8, GSU TRANSFORMERS	08-15	8.5.13 Valves	All valves shall be heavy duty Gate type and for flow regulation valves shall be of Globe type made of stainless steel material……	All Valve Upto 50 NB, Gun Metal valve shall be provided. Above 50 NB, Cast Iron with Gun Metal fitting valve shall be provided. Kindly confirm.	Kindly adhere to tender specification.
32	Vol-V (Forms and Procedures)		Appendix 2. Price Adjustment	1. Price Adjustment Formula for Supply of Plant and Equipment…….a) For Electrical Equipments:	Material component of Transformer are highly volatile. Price adjustment formula does not provide full coverage of fluctuations in price components. Accordingly, bidder has to consider this additional variation in Bid price thereby increasing the Bid price. Hence, we request Employer to consider price adjustment as per IEEMA Formula for Dry Type Trnformers also (Circular ref: PRICE VARIATION CLAUSE FOR COPPER WOUND DRY TYPE DISTRIBUTION TRANSFORMERS, Effective from: 01 September 2021) in the bid. IEEMA Formula is enclosedas **Annexure-A** for reference.	Does not pertains to Design E&M Division
				Control & Monitoring/ SEE/ VMS		
33	III B (PTS)	135/640	5.5.12.6 Vibration monitoring system	The system shall have complete analysis software with dedicated computer and accessories installed at Central Control Room	A dedicated WS is not recommended, it can be configiured in any other Portable EWS. Kindly confirm.	Kindly adhere to tender specification.
34	III B (PTS)	154/640	6.6.3 Design calculation	The Contractor shall submit the design calculation in accordance to Clause 2.4 of "General Technical Specification (GTS)" covering at least the following, for review / acceptance. 1) Power System stability Studies for identifying the most suitable values of adjustment parameters to be introduced in the excitation system and covering at-least the following; i) Insulation coordination studies comprising of switching, lighting, overvoltage and transient recovery voltage studies ii) Providing required input for carrying out load flow studies, stability studies and EMTP studies. 2) Design calculation for the capacity of Thyristor bridges, D.C. Breaker, A.C. Breakers, Discharge resistor, etc. The Contractor shall also provide other calculations as required by the Employer for his approval of the Contractor's design.	The design calculations are proprietary in nature and can't be shared. Since , there is already peovision for performance test, performance LD and warranty clauses, requirement of design calculation verification may be removed. Kindly confirm.	Kindly adhere to tender specification.

Sl. No.	Volume	Page No.	Clause No.	Tender Provision	Queries / Clarification	NHPC REPLY
35	III B (PTS)	282/640	14.1.1 Local control boards	v) One (1) no. Automatic weather station as per Annexure 2.	AWS is not a standard item for Hydro Projects. It isa complete bought out system with no interface with original control system. Employer is requested to kindly exclude this requirement from scopre of E&M Contractor.	Tender provisions are clear in this regard
36	III B (PTS)	283/640	14.1.2 Central Control Centre	viii) One (1) set of router/gateway with necessary hardware firewall functionality interfaces including DMZ as per IEC 62443, accessories and terminal units etc. for operation and control of entire power plant from remote control centre	Gateway Communication with necessary Hardware Firewall shall be provided. Kindly confirm. Employer is requested to kindly provide mode of Communictaion and length of cable - ADSS 12C (if applicable)	Tender provisions are clear in this regard
37	III B (PTS)	283/640	14.1.2 Central Control Centre	x) One (1) set of router/gateway with necessary hardware firewall functionality for Data transmission to Regional Load Despatch Centre, for monitoring.	Gateway Communication with necessary Hardware Firewall shall be provided. Kindly confirm. Employer is requested to kindly provide mode of Communictaion and length of cable - ADSS 12C (if applicable)	Tender provisions are clear in this regard
38	III B (PTS)	283/640	14.1.2 Central Control Centre	xi) One (1) set of router/gateway with necessary hardware firewall functionality, interfaces, accessories and terminal units for Data transmission to Administrative Building at Colony through ADSS optical fibre cable.	Gateway Communication with necessary Hardware Firewall shall be provided. Kindly confirm. Employer is requested to kindly provide mode of Communictaion and length of cable - ADSS 12C (if applicable)	Tender provisions are clear in this regard
39	III B (PTS)	283/640	14.1.2 Central Control Centre	xvi) One (1) set of RTM interface workstation with necessary software ,hardware ,firewall, interfaces, accessories and terminal units for Data transmission to Central Control Room at Corporate through optical fibre cable.	It is understood that PC shall be installed at NHPC Faridabad HQ through available OFC. Kindly confirm.	Tender provisions are clear in this regard
40	III B (PTS)	283/640	14.1.2 Central Control Centre	xvii) One (1) Operator Workstations each with two sets of 26" LED backlit monitors and all necessary accessories and software for installation at Uri I Stage I Power Station for operation of Uri I Stage II Power Station,	Employer is requested to kindly provide Mode of Communictaion and length of cable - ADSS 12C (if applicable) between Uri-I /Stg-I control Room and Uri-i/Stg II	Tender provisions are clear in this regard, however, please refer point no. 23 above for tentative length.
41	III B (PTS)	284/640	14.1.3 Process control networks & Power house LAN	One (1) Computer and One (1) atleast 65" smart HD-LED TV (to be installed at Administrative Buildings in colony) with all necessary accessories and software connected with Power House LAN through ADSS optical fibre cable.	Employer is requested to kindly provide length of cable - (ADSS 12C) between main control room to Administrative Buildings in colony.	Tender provisions are clear in this regard, however, please refer point no. 23 above for tentative length.
42	III B (PTS)	298/640	14.4.1 Penalty	During the period of availability of expert as defined in Clause 14.1.10. (iii) penalty shall be imposed for every incidence of fault related to control, monitoring and SCADA if not attended within 3 hours after occurrence of the fault specifically for running of each unit. The record of such incidences after 45 days from commissioning of each unit shall be maintained by the project. An amount equal to 0.01% for each event of each unit subject to maximum of 0.5% of contract value shall be levied as penalty	Nature and reason for a fault may be numerous including malfunction/poor maintainance and the Contractor may not be responsible for such occurances. 3 hr is a small period to diagnose and fix responsibility. Further failure of harware parts that need replacemnet may take time. Employer is requested to reconsider and delete this specific clause.	Tender provisions are clear in this regard

Sl. No.	Volume	Page No.	Clause No.	Tender Provision	Queries / Clarification	NHPC REPLY
43	III B (PTS)	305/640	14.5.4.3 Operator workstations	control system even in the case of failure of all other workstations. The configuration of each workstation shall be: ii) At least Octa core Processor CPU with 3.2 GHz processor and Mother Board Front Side Bus speeds available at the time of supply, iii) Minimum of 16 GB DDR3 or Higher RAM, iv) Two (2) or more – Hard Disk Drives with latest technology each of at least 2 TB capacity v) DVD writer, vi) Latest USB (3.0 or higher, if available at the time of procurement) hub and ports,	The requested specification is on much higher side for the industry norms, It is not required for OWS. Hence, OWS with a minimum of the following featurs shall be supplied: Tower/CMT, Processor intel i7/Xeon, 16 GB DDR5 Ram, 1 TB Raid1 HDD, NVidia T400 Graphics or better, DVD-RW, 3 PCI/2 Ethernet/6 USB ports; Windows 10 Enterprise/IoT. Kindly confirm acceptance.	Kindly adhere to tender specification.
44	III B (PTS)	306/640	14.5.4.4 Mobile Operator Station	The mobile operator station shall be having the following,: i) At least Quad core 3.0 GHz processor ii) At least 2 TB Hard disk with latest technology iii) At least 16 GB DDR3 or higher RAM iv) DVD writer v) Two 10/100/1000 Ethernet ports vi) Other standard ports (USB/HDMI/DVI/Bluetooth adaptors etc.) including ports to be used for connectivity with UCBs/LCBs /relays/governor/DVR etc.	The requested specification is on much higher side for the industry norms, It is not required for Mobile OWS. Mobile OWS with a minimum of the following featurs shall be supplied: 1. Intel 11th Generation Core i7 processor 1.8 GHz OR better, 1 TB SSD, 16 GB minimum, DDR4 RAM, DVD+/- RW Drive or External DVD R/W Drive, with 15.6" screen. Kindly confirm acceptance.	Kindly adhere to tender specification.
45	III B (PTS)	307/640	14.5.4.5 Engineering stations (fixed)	The engineering station shall be having the following (but not limited to) features apart from others mentioned above: a) At least Octacore 3.2 GHz processor b) At least 2 TB Hard disk with latest technology c) At least 16 GB DDR3 or higher RAM d) DVD writer e) Two 10/100/1000 Ethernet ports f) Other standard ports (USB/HDMI/DVI/Bluetooth adaptors etc.)	Engineering station with a minimum of the following featurs shall be supplied: Processor intel i7/Xeon, 3x600GB SAS HDD, 2x16 GB RAM, NVidia T400 Graphics or better, DVD-RW, 3 PCI/2 Ethernet/4 USB/1Serial ports, MS Windows Server-22 Kindly confirm acceptance.	Kindly adhere to tender specification.
46	III B (PTS)	307/640	14.5.4.6 Portable engineering station (movable)	The portable engineering station shall be having the following, but not limited to features apart from others mentioned above: a) At least Quadcore 3.0 GHz processor b) At least 2 TB Hard disk with latest technology c) At least 16 GB DDR3 or higher RAM d) DVD writer e) Two 10/100/1000 Ethernet port	The requested specification is on much higher side for the industry norms, It is not required for Mobile OWS. Mobile OWS with a minimum of the following featurs shall be supplied: 1. Intel 11th Generation Core i7 processor 1.8 GHz OR better, 1 TB SSD, 16 GB minimum, DDR4 RAM, DVD+/- RW Drive or External DVD R/W Drive, with 15.6" screen Kindly confirm acceptance.	Kindly adhere to tender specification.
Protection System						
47	III B (PTS)	Page 15:1-15:30	15.10, Tools and Instrument	The Contactor to supply all necessary tools, and instruments etc, for installation, repair and maintanancein accordance to clause 1.9 "Tools and Instrumentation" of Section-1 General Technical Requirements".	Employer is requested to kindly note that No tools & Instruments are envisageds for Protection panels.	Tender provisions are clear in this regard
GIS/ XLPE/ Bus Reactor						

Sl. No.	Volume	Page No.	Clause No.	Tender Provision	Queries / Clarification	NHPC REPLY
48	IIIB (PTS) GTR	1-19	1.10.2.1	Training during engineering / manufacturing phase	Please provide the following details:- a) The equipment list for which training is envisaged at manufacturer's works like GIS/EHV cables/ control/ Protection etc b) The number of man days for each equiment	Tender provisions are clear in this regard
49	IIIB (PTS) XLPE Cable	10-1	10.1.1 i)	Eight (8) nos. Single-phase, 400kV copper conductor, Fibre Optic embedded XLPE cables of minimum 2000 mm2 for interconnection with two outgoing bays of GIS of Uri I Stage II Project, (i.e one with outgoing bay of Uri I Stage I GIS and other with existing line bay at pothead yard of Uri I Stage I)	A) Please provide the power flow in the two outgoing bays of Uri I Stage II Project for estimating 400kV XLPE cable sizing or please confirm the rated continuous current to be considered as 1800 Amps for cable sizing. B) Bidder understand 400kV XLPE cable will be laid in the cable cum ventilation tunnel as mentioned in the referance drawings. Please confirm. C) Only part Section plan for the Cable cum ventilation tunnel is shown in the drg ref NHUR-I(II)-4CT1-41-GA-064, please provide the complete section plan of connection between the Stage-1 GIS Cavern and Stage-II GIS Cavern D)The cable tunnel connecting to GIS cavern of Stage-II to existing pothead yard is not appearing. Please provide the drawing for the same. The above details/confirmation is required for estimation of the 400kV XLPE cable circuit lengths or else provide cable circuit length. E) In the Single Line diagram the connection from the GIS to Uri-1 Stage -1 GIS(Line-1) & Pothead Yard (Line-2) is mentioned as GIL, However as per the technical specification the connection to be done by 400kV XLPE cable. Please confirm.	Tender provisions are clear in this regard. However, for route length of XLPE cable between Uri-I & Uri-I stage-II kindly refer civil drawing no. NHUR-I(II)-4CT1-41-GA-052-00. For route length of XLPE cable between Uri-I Stage-II & existing Pothead yard kindly refer tender civil drawing NHUR-I(II)-4AT1-41-GA-004-00 , NHUR-I(II)-4CT1-41-GA-043-00 and NHUR-I(II)-4AT1-41-GA-064-00 The above lenghts are tentative & shall be finalised during detail engineering.
	IIIC (TDS) XLPE Cable		10.1	2.8. Rated Continuous Current- 1800 Amps		
	IIIB (PTS) GTR	1-4		1.2.3 Salient Features Method of connection between existing Pot yard and GIS-400 kV XLPE cable		
	Volume-IV Drawings			A) Power House Area Caverns General Arrangement Plan (Drg no. NHUR-I(II)-4CT1-41-GA-043) B) Power House Cable Cum vertilation Tunnel Plan (Drg no. NHUR-I(II)-4CT1-41-GA-063) C) Power House Cable cum vertilation Tunnel Section (Drg no. NHUR-I(II)-4CT1-41-GA-064) D) Power House area General arrangement plan (Drg no. NHUR-I(II)-4CT1-41-GA-004) E) GENERAL SINGLE LINE DIAGRAM FOR GIS (Drg no. NH/DEM/URI-I STG-II/SLD/02)		
50	IIIB (PTS) GIS	1 ,2 & 3	11.1.1	b) Three (3) Single Phase, 7-Core, multi ratio, Current Transformer	Due to OEM manufacturing limitations,7 cores may not be accomodated in single CT modules and 02 number CT modules may be required. Please confirm that same will be acceptable.	Kindly adhere to tender specification.
	IIIB (PTS) GIS	2	11.1.1.4 g)	g) Three (3) SF6 / XLPE bushings for feeder connections*, * The scope of work for outgoing feeder terminations at GIS end of Uri Powerstation and at Pothead yard are stipulated in "Section 10 - 400 kV XLPE cables ofTechnical Specification (PTS)".The contractor shall co-ordinate the interface and scope of supply between manufacturer of GIS.GSU transformer & XLPE. The scope shall be as per relevant IEC	Since the scope includes outgoing feeder terminations at GIS end of Uri Power station Stage-I. Please provide the following information:- a) Bidder understand the make of GIS at Uri-1 Stage-I is M/s Hitachi (Formarly ABB) make. Please confirm. b) Bidder scope at Uri-1 Stage-1 GIS area is limited to termination of the 400kV XLPE cables only. Further testing and commissioning of the Line bay feeder(including gas filling) is not envisaged in the current scope. Please confirm. c) Bidder understand arranging supervision of GIS OEM at Uri-1 Stage -1 GIS during termination of 400kV XLPE cable is not	Tender provisions are clear in this regard. However, the existing termination details of GIS end of Uri-I PS is attached for reference. Further, connection from Cable Sealing End (CSE) to Potheadyard feeder bay is in the scope of contractor.

Sl. No.	Volume	Page No.	Clause No.	Tender Provision	Queries / Clarification	NHPC REPLY
51	IIIB (PTS) XLPE Cable	10-1	10.1.1 i)	Eight (8) nos. Single-phase, 400kV copper conductor, Fibre Optic embedded XLPE cables of minimum 2000 mm2 for interconnection with two outgoing bays of GIS of Uri I Stage II Project, (i.e one with outgoing bay of Uri I Stage I GIS and other with existing line bay at pothead yard of Uri I Stage I)	~~1 Stage -1 GIS during termination of 400kV XLPE cable is not~~ under bidder scope. Please confirm. d)Since the Pothead Yard area of Uri-1 Stage-I is already existing, hence bidder scope at Uri-1 Stage-1 Pothead Yard area is limited to termination of the 400kV xlpe cables at the cable sealing end only. Further connection from CSE to Pothead Yard feeder bay is not envisaged in the current scope. Please confirm. e) Bidder understand existing current transformer in the Pothead yard area can be used for differential protection of XLPE cable. Please confirm. f) Please provide the drawing of the existing cable module of outgoing feeder bay of GIS stage-1, bidder understand same module can be used for 2000 sqmm xlpe cable as well.	
52	IIIB (PTS) GIS	3	11.1.1.9	9) Cable tray, Cable pit / trench for connecting cable between LCC to main equipment and from LCC to LCA shall have state-of-art covering/chequered plates as finalized during detail engineering and shall be in GIS manufacturer's scope.	Bidder understand that construction of cable pit/trench is excluded from the current scope. Please confirm.	Tender provisions are clear in this regard
	IIIA (GTS)	8-6	8.8.vi)	8.8 Civil Site Work vi) Provision of cable and pipe ducts, trenches, block-outs, drilling for grounding system etc., in accordance with the drawings supplied by the Contractor and supervised by the Contractor.		
53	IIIB (PTS) GIS	4	11.2.1	Due to high altitude, clearances and ratings of equipment would be kept suitable for installations at an altitude of EL. 1251.8 m, with ice/snow considerations. The GIS and transformers are housed in a separate cavern, GIS hall is located above to transformer hall at EL 1251.8	Bidder understand since the GIS wil be installed in indoor location, Ice/Snow is not applicable. Please confirm.	Tender provisions are clear in this regard.
54	IIIB (PTS) GIS	4	11.2.2.iii)	iii) The interconnection between main GSU transformers and respective unit bays of GIS shall be through 420 kV GIB. Transformers are placed at EL 1251.8M in transformer cavern. The interconnection between bus reactor located in transformer cavern and respective reactor bay of GIS shall be through 420 kV GIB.	Bidder understand Transformer and Bus Reactor are placed at EL 1239.8. Please confirm	Tender provisions are clear in this regard. Kindly refer civil drawing no. NHUR-I(II)-4GT1-41-GA-053-00 .
	Drawing-Transformer cavern Plan & Section			Plan at Level EL 1239.8 (Drg no. NHUR-I(II)-4GT1-41-GA-053)		
55	IIIB (PTS) GIS	9	11.5.2.d)	d) All the partition/ compartment shall be designed for one side at rated pressureand other side at vacuum so as to perform maintenance safely. The contractor shall demonstrate through gas compartment segregation or otherwise how compliance of service continuity as per S. No. b, c, f and g are achieved.	A) Bidder request to exclude/delete the below mentioned clause as OEMs will not be able to comply. **"All the partition/ compartment shall be designed for one side at rated pressure and other side at vacuum so as to perform maintenance safely"**. However,Bidder confirms compliance of service continuity as per S. No. b, c, f and g. Please confirm.	Tender provisions are clear in this regard.

Sl. No.	Volume	Page No.	Clause No.	Tender Provision	Queries / Clarification	NHPC REPLY
56	IIIB (PTS) GIS	9	11.5.2.f)	f) Future extension of bays, with maximum one bus outage at a time. The arrangement of gas sections or compartments shall be such as to facilitate future extension on either end.	Please provide the following information:- a) Number of future bays envisaged. b) Provision to provide auxiliary power to future GIS bays is not envisaged in the current scope. Please confirm. c) Bidder understand provision for GIS extention is envisaged at one end only. Please confirm. d) Bidder understand placement of each GIS bays just above the corresponding GSU transformers and Bus Reactor is not envisaged. Please confirm.	Tender provisions are clear in this regard.
57	Volume-IIIB (PTS) GIS	12	11.5.7	Scope shall cover any additional CTs and/or no. of cores for CTs for additional protection and metering if felt necessary during detailed engineering.	a)The number of CTs will be as per the single line diagram for 420 kV GIS given in drawing no. NH/DEM/URI I STG-II/SLD/02 . Please confirm b) In case of additional requirements please provide the details of the same for consideration in the bid estimates.	Tender provisions are clear in this regard.
58	Volume-IIIB (PTS) GIS	12	11.5.8	Scope shall cover any additional VTs and/or no. of cores for VTs for additional protection and metering if felt necessary during detailed engineering.	a)The number of VTs will be as per the single line diagram for 420 kV GIS given in drawing no. NH/DEM/URI I STG-II/SLD/02 . Please confirm. b) In case of additional requirements please provide the details of the same for consideration in the bid estimates.	Tender provisions are clear in this regard.
59	Volume-IIIB (PTS) GIS	13	11.5.12	Number/position of surge arrestor as shown in Tender drawing is indicative and will be finalized during detail engineering based on insulation coordination studies.	a)The number of Surge arrestors will be as per the single line diagram for 420 kV GIS given in drawing no. NH/DEMI URI I STGII/SLD/02 . Please confirm b) In case of additional requirements please provide the details of the same for consideration in the bid estimates.	Tender provisions are clear in this regard. Kindly referer amended drawing NH/DEMI URI I STGII/SLD/02
60	IIIB (PTS) GIS	15	11.5.19	Implemented technology for control shall be digital and local control cubicle shall incorporate bay control unit for integration to plant SCADA system through local control Board for GIS. Colour of the cubicles shall be as per GTR clause no. 1.5.2- Colour schedule.	Local Control Cubicle (LCC) are in the scope of GIS OEMs, whereas Bay control unit are part of Control & monitoring system. It is requested to accept mounting of Bay control units in separate panels which will be kept in vicinity of LCCs.	Tender provisions are clear in this regard.
61	IIIB (PTS) LV Switchgear	19-4	19.2.1	The flood dewatering pump shall normally be fed from Flood dewatering cum disaster management board at GIS hall with provision of charging from SSB1/SSB2 and from LV side of Flood dewatering Auxiliary Transformer.	A) Bidder understand there is no connection between the GIS distribution board and Distribution board for flood dewatering & disaster management. Please confirm. B) Bidder understand GIS distribution board will be placed in the GIS hall. Please confirm. C) The Location of the Flood dewatering cum disaster management board and Auxiliary Transformer for Disaster management & Flood Dewatering is not shown in the GIS Floor drawing. Bidder understand there will be separate swithgear room for placing the same. Please mark the location in the drawing.	Tender provisions are clear in this regard. Please refer MV single line diagram drawing no. NH/DEM/Uri-I Stage-II/CP/05 & LV switchgear chapter.
	IIIB (PTS) LV Switchgear	19-1	19.1.1	iv) One(1) nos., 11 / 0.415 KV, 800 KVA dry type, 3-phase - Auxiliary Transformer for Flood Dewatering (to be placed at GIS floor)		
	Volume-IV Drawings			Drg No. NHUR-1(II)-4GT1-41-GA-054 Transformer Cavern Plan at EL 1251.80M(GIS FLOOR)		
	IIIB (PTS) LV Switchgear	19-2	19.1.2	iii) One (1) set of Distribution board for GIS ix) One (1) set of Distribution board for flood dewatering & disaster management (to be placed at GIS hall).		

Sl. No.	Volume	Page No.	Clause No.	Tender Provision	Queries / Clarification	NHPC REPLY
62	**IIIB (PTS) LV Switchgear**	**19-2**	**19.1.2**	iv) One (1 set) of distribution Board for Pot yard	A) The SLD of the board is not available, please provide the incoming /outgoing feeder details. B) Bidder understand since the Pothead yard is already existing (Uri-Stage-I) so 415kV Switchgear is already existing in pothead yard catering to the aux power requirement of existing pothead yard equipments. Hence the mentioned requirement of One (1 set) of distribution Board for Pot yard in the current tender is not catering to the auxiliary load requirement of existing pot yard equipments. Please confirm. C) Please mark location of the boards. D) Please provide GA/section drawing of the existing Pothead yard of Uri-I stage-I.	Tender provisions are clear in this regard.
63	**IIIB (PTS) Illumination**	**20-4**	**20.2.1**	B)Outdoor lighting The lighting Network of Outdoor Pothead yard.	A)Bidder understand that Pothead Yard is completely excluded in the current scope. There is no drawings/Specification of Pothead yard area. Hence It is requested to please exclude illumination scope of Pothead Yard area as well. Please confirm. B) If otherwise , then drawings of the pothead yard area marking the EHV equipments/DG room and other facilities to be provided.	Tender provisions are clear in this regard.
	IIIC (TDS) Pothead Yard		**12**	Not applicable		
64	**IIIB (PTS) Illumination**	**20-4**	**20.2.1**	However, area supplied from MLDBs of Power house and Pothead yard shall be finalised during detail engineering.	Please provide the details of the illumination scope to be covered by Pothead Yard MLDB. Same is required for sizing calculation.	Tender provisions are clear in this regard.
65	**IIIA (GTS)**	**1-2**	**1.3**	If requested by the Engineer in-Charge the Contractor shall supply at his own expense three copies in English and one in the original language of any national standards, which are applicable to the Contract.	Bidder understand the copy of applicable national standards i.e BIS standards only are to be provided. Please confirm.	Tender provisions are clear in this regard.
66	**IIIA (GTS)**	**4-6**	**4.10.4**	Painting in respect of standard items shall be acceptable as per manufacturer practice	Bidder understand for GIS, OEM painting practice is acceptable. Please confirm.	Tender provisions are clear in this regard.
67	**IIIA (GTS) Annex-2**	**3**		REQUIRED DOCUMENTS FOR E&M EQUIPMENT 14 i) Insulation coordination studies	Bidder understand the pothead yard area is already existing. So studies for sizing of line side surge arrestor is not applicable. Please confirm.	Tender provisions are clear in this regard.
68	**Volume-V Appendix 2. Price Adjustment**	**235 of 311**	**22**	1.Price Adjustment Formula for Supply of Plant and Equipment	For the 400kV XLPE cable(Item no. 10.1 of Price Schedule 1), employer is requested to accept Price adjustment for supply as per the applicable IEEMA standard.	Please adhere to bid condition.
69				General	Bidder understand the creepage is 25mm/KV. Please confirm.	Shall be dealt as per relevant applicable standard / Bid specification during detail engineering.

Sl. No.	Volume	Page No.	Clause No.	Tender Provision	Queries / Clarification	NHPC REPLY
70	IIIC (TDS) Pothead Yard		12	Not applicable	Bidder understand following works are excluded from current scope at the Pothead Yard Area. Please confirm. A) Supply and Erection of Pothead Yard Equipments. B)Cabling Works(both LT Power and Control) including cable trays/racks C) Auxiliary Power arrangement for Potheadyard Equipments. D) Fencing works E)Lightning Protection etc.	Tender provisions are clear in this regard. However, please note that supply & erection of cable sealing end (CSE) along with all associated structures, hardwares etc. and termination of CSE with line bays is in the scope of contactor. Also, supply and erection of all control & instrumention cables for line bay equipments and cables for monitoring & protection of XLPE cable, including required cable trays and associated items, from pothead yard to Uri-I stage-II is in the scope of contactor. In addition to the above, Dismantling of existing PLCC panel from Uri-I PS and installation of the same at Uri-I stage-II along with supply & laying of cable for PLCC from Pothead yard to Uri-I stage-II, shall be in the scope of the contractor. Please refer amendment in this regard.
71	IIIB (PTS) XLPE Cable	10-2	10.1.1 xii)	Scope of termination of one of the outgoing lines of URI-I Stage-II at GIS of Uri-I and the other at pothead yard of Uri-I includes:…… ……..Any other item(s) not mentioned specifically but necessary for the satisfactory completion of scope of work defined above, as per accepted standard(s) / best international practices.	Bidder understand there is no dismantling scope for online PD monitoring /Real time temperature monitoring system with Distributed Temperature Sensing (DTS)	Tender provisions are clear in this regard.
72	IIIB (PTS) XLPE Cable	10-2	10.1.1 xii)	c) Dismantling of existing support structures of EHV cables from Cable tunnel and Rolling back the dismantled EHV cables of one circuit ,total 3 cables , each of approx. 830 m length, on existing drums in Pothead yard area	Please provide the existing support structure drawing.	Shall be dealt during detail engineering.
73	IIIB (PTS) XLPE Cable	10-1	10.1.1 i)	Eight (8) nos. Single-phase, 400kV copper conductor, Fibre Optic embedded XLPE cables of minimum 2000 mm2 for interconnection with two outgoing bays of GIS of Uri I Stage II Project, (i.e one with outgoing bay of Uri I Stage I GIS and other with existing line bay at pothead yard of Uri I Stage I)	Please provide the specification of the fibre optic embedded cable.	Tender provisions are clear in this regard.
74				General	Specific Qualification Criteria for 400kV XLPE cable is not available. Please provide the same.	Kindly refer amendment.
75	IIIB (PTS) Protection System	15-4	15.2.3	400 kV XLPE cable Link from Uri I stage II to Uri I stage I shall be protected by cable (sheath) over current protection in addition to Differential protection and 400 KV XLPE cable from Uri I Stage II to pothead yard of Uri I shall be protected by cable (sheath) over current protection.	a) Please provide the make of the Protection and control for Uri-1 Stage-1. b) Please provide the schematic drawing of the GIS Line feeder of Uri-I stage-I which is to be connected by 400kV XLPE cable. c) Since bidder is not OEM, it is requested to provide OEM supervision for the modification in GIS stage-I control panel.	a) & b) Shall be dealt during detail engineering. c) Already adressed under clause no. 11.1.1 note 1 & 2 of specification
		15-5	15.2.4 E	** IED for cable differential protection shall be installed at Uri-I Stage I Protection panel. The same shall be in scope of contractor. Hard wired tripping shall be wired to master trip relay of both the ends for instantaneous tripping of breaker at both ends.		

Sl. No.	Volume	Page No.	Clause No.	Tender Provision	Queries / Clarification	NHPC REPLY
				Erection and Commisioning		
76	**Volume I: (IFB)**		**5**	Location and Access: The Proposed construction sites are well connected with the access roads. Adit 1 to Adit 6 including Power House access tunnel are <500 m distance from the Srinagar – Uri National Highway (NH-1) and are approximately within 20km-25km distance from Quarry areas and facilities areas.	1. Employer is requested to provide levelled & compacted land near (within 1km distance) to project area on free of cost basis. 2. Approx. area required of transit storage purpose is 6000sqm for Storage of project materials . Kindly confirm acceptance.	Does not Pertain to Design (E&M) Division
77	**Volume I: (IFB)**		**7**	Construction Power	Employer is requested to provide 3 phase 415V power supply for construction power, free of cost at following locations: Power house, switchyard and other work areas. Kindly confirm acceptance.	Please adhere to bid specifications
78	**Volume I: (IFB)**		**12**	Any other relevant information: The project has the availability of a residential colony in the project area at a distance of about 1 km from Adit 3. The Contractor can use the accommodation in the Colony after undertaking necessary renovation. On completion of the project, the contractor shall vacate the accommodation in a usable condition. The contractor will bear all charges including water, electricity etc. during the period of their use of the Colony premises.	We request M/s NHPC to provide this facility for Contractor's use free of cost. Kindly confirm acceptance.	Please adhere to bid specifications
79	**Volume IIA: GCC**		**22.6.2**	Clearance of Site after Completion: After Completion of all parts of the Facilities, the Contractor shall clear away and remove all wreckage, rubbish and debris of any kind from the Site, and shall leave the Site and Facilities in a clean and safe condition.	Clearance of Site after Completion: We understand that site clearance only for the materials supplied under E&M package is in the scope of present tender. Also, all the scrap materials generated during erection and commissioning and surplus materials left after completion of facilities shall be the property of contractor. Kindly confirm acceptance.	Please adhere to bid specifications
80	**Volume IIA (GCC)**		**22.7**	Watching and Lighting The Contractor shall provide and maintain at its own expense all lighting, fencing, and watching when and where necessary for the proper execution and the protection of the Facilities, or for the safety of the owners and occupiers of adjacent property and for the safety of the public.	We understand that Watching and lighting shall be required at E&M stores outside power house only. Kindly confirm acceptance.	Please adhere to bid specifications
81	**III B (PTS)**		**2-5**	2.2.4 Construction Methodology	Temporary crane of 20T available with civil agency shall be available to E&M bidder for installation of DT liner and embedements free of cost. Employer is requested to extend this facility & confirm.	Tender provisions are clear in this regard.
82	**III B (PTS)**		**14.1.4**	Link between Uri I & Uri I Stage II Power Houses	Employer is requested to inform cable route length b/w Uri I & Uri I Stage II Power Houses. Also civil work for laying of cable shall be in scope of Employer. .	Tender provisions are clear in this regard. However, please refer reply at sl. no. 23 above for route length.

Sl. No.	Volume	Page No.	Clause No.	Tender Provision	Queries / Clarification	NHPC REPLY
83	III B (PTS)		14.1.5	Link b/w Power house and administrative building in colony.	Employer is requested to inform cable route length b/w Power house and administrative building in colony. Also civil work for laying of cable shall be in scope of Employer. Kindly confirm acceptance.	
84	III B (PTS)		20.1.1	Normal lighting system	We understand that civil work of any type is excluded from E&M Contractor's scope. Kindly confirm acceptance.	Tender provisions are clear in this regard.
85	III B (PTS)		23.1.3	Miscellaneous items Load testing of cranes at site including load arrangement and all logistics,	"It is not viable for EOT crane supplier to transport the dead load and take back the load from site. Hence Load required for conducting load test should be provided by the owner. Please confirm."	Kindly adhere to tender specification.
86	III B (PTS)		29.3.1.1	(B) Bore well Pump The scope shall cover the bore well pump including the bore for installation of pumps, starter panels etc. for a functional system	We understand that NO civil work including prepration/excavation of Bore well is not in E&M vendor scope. Kindly confirm acceptance.	Tender provisions are clear in this regard.
87	Volume-V (Forms & Procedures) Appendix 2. Price Adjustment		2 (C)'	The total adjustment (plus or minus) shall be subject to a ceiling amount of 25% of the Contract price during contractual completion period.	We request customer to provide price variation without any ceiling . Kindly confirm acceptance.	Does not Pertain to Design (E&M) Division
88	Volume-V (Forms & Procedures)		Appendix 3	Third Party Liability Cover	As Employer has included EAR policy in their scope and Third Party liability insurance is normally integrated cover with EAR Policy, Hence,it is requested that third policy liability cover is excluded from Contractor's scope. Kindly confirm acceptance.	Please adhere to bid specifications
89	Volume V Forms & Procedure		35.1 List of agencies	Erection/Installation Services	During finalization of subcontractors for execution of E&M works, if offers received from additional vendors (other than list of approved vendors mentioned in tender documents) and complying to the technical specification, the same shall be approved after submission to employer along with credentials. Kindly confirm acceptance.	Tender provisions are clear in this regard.
90	Volume V Forms & Procedure		33.1	Erection/Installation Services Specific qualification criteria	We wish to submit that E&M bidders have established standard procedure for Pre-qualification requirements for qualifying their vendors for undertaking Erection, Testing and commissioning works for E&M works in hydro projects and with this standard PQR we have executed number of Hydro projects. In view of above, Employer is requested allow E&M bidders to use their standard PQR, for enabling them to finalize of our ETC sub-contractor for Erection/Installation Services. Kindly confirm acceptance.	Please adhere to bid specifications
				Illumination System		
91	VOLUME-IV-TENDER DRAWINGS				Please share the autocad format drawings or provide the lengths of all the Adits, tunnels, roads ,galleries, caverns to work out the illumination system BOQ	Tender provisions are clear in this regard.

Sl. No.	Volume	Page No.	Clause No.	Tender Provision	Queries / Clarification	NHPC REPLY
92	VOLUME-IV-TENDER DRAWINGS	28 OF 42		Power house area general arrangement plan.	Please share the Lengths of connecting gallery, Adits and tunnels to be illuminated so that BOQ can be worked out accordingly.	
93	VOLUME-IIB-PTS ILLUMINATION SYSTEM	SECTION-20 PAGE 420 OF 640	20.1.4 (g)	All necessary AC copper bus bar (including N bus bar and incomer) of short circuit capability of at least 40 KA for 1 sec	Please note that MLDB shall be provided with Lighting isolation transformer to reduce the fault level to ensure the safety and protection of Lighting fixtures and small power services reducing the fault level to 9 KA for 1 sec and all MCB/MCCBs are designed to cater to 9 KA for 1 sec. Hence the bus bar shall have short circuit current capability of 9 KA for 1 sec	Kindly adhere to tender specification.
94	VOLUME-IIB-PTS ILLUMINATION SYSTEM	SECTION-20 PAGE 420 OF 640	20.1.4 (a)	Required no. of draw out MCCBs Modules	Please note that the incoming of MLDB shall be provided with MCCB and outgoing feeders shall be provided with MCB. All modules are fixed type in MLDB.	Tender provisions are clear in this regard.
95	VOLUME-IIB-PTS ILLUMINATION SYSTEM	SECTION-20 PAGE 421 OF 640	20.1.5 (v)	Coordination and provision of necessary contacts and /or ports for integration with plant control & monitoring system	Please clarify the requirement of provision of contacts/ports and list of signal to be exchanged with plant control & monitoring system. Is the MLDB required to be controlled form Plant control and monitoring system or Energy data is to be transferred from Energy meter to the Plant control & monitoring system	Tender provisions are clear in this regard.
96	VOLUME-IIB-PTS ILLUMINATION SYSTEM	SECTION-20 PAGE 424 OF 640	20.2.3	In order to achieve the interruption free lighting, entire lighting system (CAN/ACE) of power house control room and critical areas shall be fed through dedicated LDB which shall be fed through Inverter meant for ACE system	Please note that in control room and critical areas generally 30% fixtures are fed from ACE which ensures uniform lux level of 30% of the desired lux level in control room in case of normal supply failure i.e. 150 Lux (which is good enough for working for short duration during normal supply failure) out of 500 Lux will be available uniformy in case of normal supply failure for control room and similarly for other critical areas. However, if 100% lighting is provided form ACE, it will increase the loading on ELDB.	Kindly adhere to tender specification.
97	VOLUME-IIB-PTS ILLUMINATION SYSTEM	SECTION-20 PAGE 425 OF 640	20.2.3	Control panel shall be designed to enable the lighting levels in different parts of the room to be independently adjusted to take account of : i) Control room operator preference, ii) Nigh-time conditions and daylight conditions.	Please note that the control room needs to be well illuminated at all times for efficient working. Further, the day light can be accessed only if window is avaiulable. Please clarify the requirement and usage of Control panel. Is the same required for dimming of lighting fixtures as per operature requirement during night time? However it may lead to difficult in viewing the operator desk and monitoring the plant operations	Tender provisions are clear in this regard.
98	VOLUME-IIB-PTS ILLUMINATION SYSTEM	SECTION-20 PAGE 425 OF 640	20.2.3.2 Power supply	Power and industrial outlet circuits for control room, office areas and individual sockets incorporated in cubicles and cabinets intended for electronic apparatus and computer sockets shall be supplied through inverter.	Please provide the total number and load of such power and industrial outlet circuits so that BOQ and Emergency load of ELDB can be worked out	Shall be dealt during detail engineering.

Sl. No.	Volume	Page No.	Clause No.	Tender Provision	Queries / Clarification	NHPC REPLY
99	VOLUME-IIB-PTS ILLUMINATION SYSTEM	SECTION-20 PAGE 428 OF 640	20.5.2	Scheme of Luminaire and fitting	For MIV floor, Runner removal floor, drawinage galleries, pump floor, generator barrel (inside) and turbine pit, Access tunnels etc, Water proof LED fittings have been specified in the specification. Please specify the degree of Protection of these water proof LED fixtures to be considered. For construction Adit to Power house cum ventilation tunnel, dust & water proof LED lamp fitting has been specified, please specify the Degree of protection of this LED lamp fitting to be considered.	Kindly adhere to tender specification.
100	VOLUME-IIB-PTS ILLUMINATION SYSTEM	SECTION-20 I PAGE 428 OF 640	20.5.2	Scheme of Luminaire and fitting	Please provide legible drawings of all the areas specified under this clause for which illumination is to be done so that BOQ can be worked out.	Shall be dealt during detail engineering.
101	VOLUME-V Forms & Procedures	ATTACHMENT V-A	21.2	ILLUMINARIES / FITTINGS: PHILIPS CGL GE BAJAJ ELECTRICAL LTD.	In addition to specified makes, we propose additional BHEL Approved LED fixture makes also to be included in the list: HAVELLS INDIA LIMITED, SURYA ROSHNI LIMITED, M/S HPL ELECTRIC & POWER PVT. LTD, INSTA POWER, Pyrotech Electronics Pvt. Ltd., M/s Halonix Technologies Limited, M/s JAQUAR & COMPANY PVT. LTD., M/s WIPRO ENTERPRISES PRIVATE LTD., M/s Nessa Illumination Technologies Pvt. Ltd., M/s. Forus Electric Pvt. Ltd., M/s. ORIENT ELECTRIC LIMITED., M/s Mika Engineers, M/s Kalingia Illuminaton Pvt Ltd., M/S SHAKTI INDUSTRIES, M/S CENTURY LED, Neev Luminaries	Kindly adhere to tender specification.
				HVAC		
102	Volume III B (PTS) Chapter 26 (HVAC)		26.1.1 (i)	Two (2) sets of Fresh air blowers of 100% capacity each (one unit serves as standby) including filters, enclosures etc. for supply of fresh air to the entire system, to be located at the Ventilation tunnel portal.	As per Clause 26.1.1(i) of the HVAC Specification and the table under Clause 26.2.1, only one set of fresh air blowers is required to be provided. However, the HVAC System Flow Diagram indicates two sets of fresh air blowers/fans. This appears to be a discrepancy between the specification and the flow diagram. Kindly clarify the intended requirement.	Tender provisions are clear in this regard.
	Volume III B (PTS) Chapter 26 (HVAC)		NH/DEM/URI-I STG-II/AC/01 HVAC SYSTEM AIR FLOW DIAGRAM	Two sets of Supply Fans each having 2 Nos. of fans in Ventilation tunnel, naming Inlet Fresh Air Fan and Fresh Air Blowers are shown.		
103	Volume III B (PTS) Chapter 26 (HVAC)		26.1.1 (i)	Two (2) sets of Fresh air blowers of 100% capacity each (one unit serves as standby) including filters, enclosures etc. for supply of fresh air to the entire system, to be located at the Ventilation tunnel portal.	As per the General Arrangement Plan, the Stage-II Ventilation Tunnel (Ø5000 mm) is shown connecting to the existing Stage-I Cable-cum-Ventilation Tunnel. In this regard, kindly clarify the following: 1. Please confirm the exact location of the fresh air blowers/fans—whether they are proposed at the junction of the Stage-I and Stage-II tunnels or outside the existing Cable-cum-Ventilation Tunnel. 2. In either case, it is understood that the design calculations and equipment selection for these blowers/fans shall be based solely on the ventilation requirements of Stage-II areas. Kindly confirm. 3. Please confirm that adequate space and provisions shall be available for routing fresh air ducts from the outside atmosphere to the respective AHU rooms	Kindly refer amended chapter in this regard.

Sl. No.	Volume	Page No.	Clause No.	Tender Provision	Queries / Clarification	NHPC REPLY
104	Volume III B (PTS) Chapter 26 (HVAC)		26.1.2	iii) Required nos. of smoke exhaust air fans for exhaust of smoke/ air through exhaust duct from all ventilated areas including powerhouse floors, control block, service bay, Transformer cum GIS cavern, galleries, bus duct, store, kitchen etc. with 100% stand by capacity. iv) Required nos. of exhaust air fans for Transformer / GIS room each of 100% of standby capacity. v) Required nos. of exhaust air fans for exhaust of air from the Powerhouse with 100% stand by capacity	From the stated requirements, it is understood that each cavern is to be provided with a separate normal exhaust system as well as a dedicated smoke exhaust system, each sized for 100% capacity. Considering the constraints associated with equipment installation space and duct routing within the tunnels, it is proposed that, in line with the practice adopted in several underground hydroelectric projects, including the NHPC Dibang Project, a common exhaust system comprising 2 × 100% capacity exhaust fans be provided. Under normal operation, one fan shall remain on standby, while in the event of a fire/smoke emergency, both fans shall operate simultaneously to facilitate rapid smoke extraction and ensure effective ventilation. Kindly accept.	Shall be dealt during Detail Engineering
105	Volume III B (PTS) Chapter 26 (HVAC)		26.1.2	vii) Required nos. of exhaust air fans for exhaust of air/smoke from Main Access tunnel, DT gate operating cavern, adit to power house top area connecting tunnel, adit to transformer cavern top connecting tunnel, E&M stores outside the power house, Adit to pressure shaft lower gallery, escape gallery, connecting gallery, Cable tunnel & Ventilation tunnel with 100% stand by capacity.	With reference to the proposed exhaust ventilation arrangement, kindly clarify the following: 1. Please confirm whether exhaust air from all the identified tunnels is required to be conveyed through ductwork or can be discharged directly without ducting. 2. In cases where a Stage-II tunnel opens into an existing Stage-I tunnel, please confirm whether the exhaust air from the Stage-II tunnel shall be discharged at the junction/intersection of the two tunnels or routed directly to the outside atmosphere through the existing tunnel. 3. Please confirm the intended location of the exhaust fans, i.e., whether they shall be installed: - At the tunnel portal (inside the tunnel), - At the junction/intersection of the Stage-I and Stage-II tunnels, or - Outside the tunnel with direct discharge to atmosphere. 4. In either arrangement, it is understood that the design calculations and equipment selection for the exhaust system shall be based solely on the ventilation requirements of Stage-II areas. Kindly confirm. 5. Please confirm that adequate space and necessary provisions shall be available for routing of exhaust ducts	Shall be dealt during Detail Engineering
	Volume III B (PTS) Chapter 26 (HVAC)		26.3.1	The maximum and minimum river water temperatures during the year shall tentatively be considered as 30° C and 3.0°C respectively	1. Kindly note that, for a once-through AHU ventilation system, maintaining an indoor temperature of 30°C is technically not feasible if the available river water temperature is also 30°C. For effective heat transfer in a once-through cooling system, a minimum temperature differential of approximately 10°C between the cooling water and the desired indoor air temperature is generally required.	Kindly refer amended chapter in this regard.

Sl. No.	Volume	Page No.	Clause No.	Tender Provision	Queries / Clarification	NHPC REPLY
106	Volume III B (PTS) Chapter 26 (HVAC)		26.3.2	Other areas of Power House, Control Block shall be catered by air handling units, vertically mounted AHUs and fresh air units in the Powerhouse, service bay, drainage gallery, bus duct galleries as well as control block floors, transformer cavern, GIB area and GIS Cavern shall be maintained at temperatures between 20°C - 30°C at a relative humidity not exceeding 65%.	In view of the above, kindly provide the design river water temperature to be considered for HVAC system design and confirm the corresponding indoor temperature requirement to be maintained. 2. Further, considering the presence of water and associated moisture sources at various levels/floors of the powerhouse, achieving precise humidity control throughout all areas of the powerhouse may not be practically feasible.	
107	Volume III B (PTS) Chapter 26 (HVAC)		26.1.4	ii) One (1) nos. of raw water automatic self cleaning duplex wedge wire filters, along with local control panel, instrumentation and associated accessories for cooling water circuit.	Kindly confirm whether the self-cleaning duplex filter mentioned herein is the same as the 2000-micron duplex filter shown in the drawing "COOLING WATER DIAGRAM FOR VENTILATION SYSTEM – NH/DEM/URI-I STG-II/AC/02", which is indicated as being common to both the HVAC and shaft seal cooling systems.	Kindly refer amended chapter in this regard.
108	Volume III B (PTS) Chapter 26 (HVAC)		26.2.1	**Layout and General Arrangement** Existing air intake tunnel of Uri Power Station shall be used for fresh air intake after suitable augmentation/modification in existing main air intake fans/system / any other arrangement. Normal exhausts of powerhouse area/transformer area shall be routed through MAT and smoke/battery exhaust etc. shall be done through adit to powerhouse top. However, final duct routing shall be decided during detail engineering.	Utilization of the existing systems with augmentation/modification is not feasible. Accordingly, separate, independent, and dedicated fresh air and exhaust systems are proposed for Stage II. You are requested to kindly confirm the same and provide adequate space for the equipment, along with the required provisions for duct routing.	Kindly refer amended chapter in this regard.
109	Volume III B (PTS) Chapter 26 (HVAC)		26.5.2.4	**FANS** **Airfoil fan sections shall have one DWDI airfoil fan** wheel and scroll. Airfoil blades shall be double thickness design. They shall be painted with zinc chromate primer and enamel paint. **Plenum fan sections shall have one single width single inlet (SWSI) airfoil fan** wheel. Airfoil blades shall be double thickness design. Wheels shall be painted with zinc chromate primer and enamel paint. They shall be designed for continuous operation at the maximum rated fan speed and motor horsepower.	The selection criteria specified for DIDW and SISW centrifugal fans are not clear. Kindly clarify the basis for selection and the application criteria for each type.	Tender provisions are clear in this regard.
110	Volume III B (PTS) Chapter 26 (HVAC)		26.5.15	**Exhaust Air Fans** Exhaust air fans shall be adjustable axial flow fans. Axial air fans shall be of the multi blade vane type. The vanes shall be adjustable individually at standstill. The hub of the impeller shall be directly coupled to the motor shaft and its diameter adapted to the motor frame. The impeller shall be statically and dynamically balanced.	The fans required for exhaust ventilation of the cavern as well as the tunnels are of high capacity and require high static pressure. Therefore, kindly permit the use of centrifugal fans for the exhaust system as well.	Kindly refer amended chapter in this regard.
111				General	Please confirm if there is any HVAC requirement in Draft Tube Gate operation cavern.	Tender provisions are clear in this regard.

Sl. No.	Volume	Page No.	Clause No.	Tender Provision	Queries / Clarification	NHPC REPLY
112	Volume-IV-Tender-Drawings		NHUR-I(II)-4CT-41-GA-043-00	POWER HOUSE AREA CAVERNS GENERAL ARRANGEMENT PLAN	In the referenced drawing, two numbers of ventilation shafts of 3000ø diameter (circular finish) are shown around the ventilation tunnel. Kindly confirm whether these shafts are part of the HVAC system. If yes, please provide the necessary clarification regarding their intended function and integration with the system.	Tender provisions are clear in this regard.
113	III B (PTS)	536 of 640	26.5.17	The HVAC system shall be equipped with operation on fully automatic mode and manual mode. All the necessary cabling between the control panels and the field HVAC components (as fans, sensors, pumps, valves, air dampers, etc.) shall be included in the supply.	DCS based control system for HVAC shall be provided. Please confirm.	Tender provisions are clear in this regard.

Sl. No.	Volume	Page No.	Clause No.	Tender Provision	Queries / Clarification	NHPC REPLY
				Queries on Attachment 5A & 5B		
114	**Volume-V**	**22/313**	**Attachment 5A**	4. 0 Generator	Employer is requested to add additional vendors as per list enclosed as **Annexure-B.**	Kindly adhere to tender specification.
115	**Volume-V**	**22/313**	**Attachment 5A - 5. 0 INSTRUMENTS AND DEVICES common for turbine, generator, MIV, and Governor**	5.7 VIBRATION MONITORING SYSTEM Mkes: VIBRO SYSTEM; BRUEL AND KJAER; SHINKAWA ELECTRIC CO.LTD.; GE (BENTLEY NEVADA); MC MONITORING; LAGGE TECHNOLOGIES; LOGIC PLUS PLUS; IRD MECHANALYSIS; MEGGIT INDIA PVT. LTD.;	Employer is requested to add BHEL-Valmet make indegineous VMS 'KAMPAN-1' which is already working in several indian and overseas power plants.Credential List is enclosed as **Annexure-C** Kindly confirm acceptance..	Kindly adhere to tender specification.
116	**Volume-V**		**Attachment 5A**	LIST OF APPROVED SUBCONTRACTORS/VENDORS	Bidder understand other OEMs meeting qualifying requirement and having valid type test reports are also acceptable for 400kV XLPE cables, 400kV GIS equipments after submitting formal request to the Employer. Kindly confirm acceptance..	Tender provisions are clear in this regard.
117	**Vol.-V, attachement 5A**	**69 of 338**	**1.1.6, 1.1.8, and 1.1.9**	List of approved vendors	In the given approved vender list for Runner Castings(sr. no. 1.1.8) and Guide Vane Castings(sr. no. 1.1.6), following vendors may be considered for addition: 1. BSL Castings Pvt. Ltd. 2.Vimal Alloys Pvt. Ltd. And, for Steel plates(sr. no. 1.1.9), may please consider addition of M/s ArcelorMittal Nippon Steel India Ltd.	Kindly adhere to tender specification.
118	**Volume V**	**pg 14 of 311**	**Attachment 5A**	List of approved subcontractor/ vendors	As BHEL have a stringent and transparent Procurement policy based on GEM. So, we propose to finalize the list of subcontractor/ vendors for bought-out items mutually during detail design. Kindly accept.	Tender provisions are clear in this regard.
119	**Volime-V**		**Attachment 5 (B) 1.1.8, 2.2, 2.3, 2.4, 2.5, 2.6** **3.4, 3.5, 4.2.7, 4.2.8, 4.2.9, 4.2.10, 4.2.11, 4.2.12, 4.2.13** **32.4** **32.5**	"should have been in satisfactory operation for at least two years at minimum two (2) Hydro Power Stations/ Pump Storage Plants, each comprising at least two units or at minimum one (1) Hydro Power Station/ Pump Storage Plant of at least four units.	In addition to Hydro /Pump Storage Plant, any industrial installation should also be considered. Please allow for performance certificate of power plants with single units also.. Kindly accept and confirm.	Tender provisions are clear in this regard.
120	**Volume 5, Attachment 5B**	**39,40,41, 50,51,52 of 91**	**12.0, 12.1, 12.2, 17.0,17.1, 17.2, 18.0,18.1, 18.2,18.3, 18.4**	Specific Qualification Criteria of 220V DC System (Battery, DCDB), DG Set (Engine, Alternator), 415V LTAC Switchgear/ Panel/ UAB/ SSB, CT/PT, NUMERICAL/PROTECTION / AUXILIARY RELAYS): The equipment so supplied by the subcontractor/ sub vendor should have been in satisfactory operation for at least two years at minimum two power stations.	Certificate for satisfactory operation for at least two years is restrictive & is difficult to obtain for the vendors. Commissioning/ installation report (irrespective of "at least two years") may also be considered for proof of successful operation.	Tender provisions are clear in this regard.

Sl. No.	Volume	Page No.	Clause No.	Tender Provision	Queries / Clarification	NHPC REPLY
121	Volume 5, Attachment 5B	55,56,57, 83,84 of 91	20.0,20.1, 20.2,20.3, 20.4, 31.0,31.1, 31.2	Specific Qualification Criteria for Communication System (Public address System Integrator, PA System,EPABX, Conferenceing System), SECURITY AND SERVEILLANCE SYSTEM (INTEGRATOR, ACCCES CONTROL SYSTEM AND CCTV SURVELLIANCE SYSTEM) The Sub-contractor/ vendor/ Integrator: i) Should have designed, supplied and commissioned Public address system for hydro power station having capacity of 25MW or above during the last twenty(20)years ending last day of the month previous to the one in which Contractor proposes / applies for inclusion. ii) The equipment so supplied should have in satisfactory operation for at least two years at minimum two power stations.	1. Experience of other sectors apart from hydro power station may also be considered like thermal and other power stations, industrial applications, offices, etc. 2. Capacity of 25 MW is not relevant for Communication System. 3. Certificate for satisfactory operation for at least two years is restrictive & is difficult to obtain for the vendors. Commissioning/ installation report (irrespective of "at least two years") may also be considered for proof of successful operation. Kindly confirm acceptance.	For Communication system, kindly refer amendment and for other systems tender provisions are clear.
122	Volume 5, Attachment 5B	41-67, 42-67	21	Specific Qualification Criteria for Electrical Workshop: i) The items/equipment should have been in satisfactory operation for at least two years at minimum two (2) Power stations / sub-station / industrial installations / Govt laboratories. In support of above, documentary evidence duly certified by contractor along with the complete details of the company profile be furnished. Further, certification by contractor shall also be submitted that the vendor is having sufficient technical & manufacturing capability and financial resources to manufacture the item(s)/component(s) required for the project. Note: '*Similar items/equipment' is defined as used in relevant item/equipment of Electrical workshop of Power stations sub-station / industrial installations / Govt laboratories.	Only proof of supply to power stations/ industrial applications/ labs/ institutions can be provided. Performance certificates are not possible. Kindly accept. These items are supplied by traders and not by OEMs themselves. Therefore, detailed documents like company profile, technical & manufacturing capability , financial resources etc. is not possible to be provided. Kindl;y accept.	Tender provisions are clear in this regard.
123	Volume V Attachement 5 B	Page 71of 91	25.1	The Sub-contractor/vendor/Integrator: i) Should have designed, supplied and commissioned HVAC system for underground power station having capacity of 25MW or above earlier during the last twenty(20)years ending last day of the month previous to the one in which Contractor proposes / applies for inclusion. ii) The system so supplied should have been in satisfactory operation for at least two years at minimum two hydro power stations. iii) Should be an ISO certified company. In support of above, documentary evidence duly certified by contractor along with the complete details of the company profile be furnished. Further, certification by contractor shall also be submitted that the vendor is having sufficient technical capability and financial resources to design, supply & commission the item(s)/component(s) required for the	It is understood that for vendors mentioned in approved vendor list no PQR documents shall be submitted. Further - 1. From the list of Approved Subcontractors/vendors for HVAC System that has been given in specified clause. Barring one or two subvendors, all are either Inactive or not quoting to BHEL or regular basis. 2. Kindly note It is very difficult to find suppliers in the industry who have underground HVAC experince. HVAC being a generic field used in hospitals, Airports, Malls, Residential Building & other commercial establishments. Accordingly, experience of HVAC supplier in any industry (including thermal Power expereince) expereince may also be accepted	Tender provisions are clear in this regard.

Sl. No.	Volume	Page No.	Clause No.	Tender Provision	Queries / Clarification	NHPC REPLY
124	Volume V Attachement 5 A	Page 24 of 33	27.1	KIRLOSKAR PNEUMATICS BLUE STAR LTD. VOLTAS LTD. CARRIER AIRCON LTD. FEEDERS LLOYD ABB S K SYSTEMS PVT LTD. STERLING WILSON C-DOC BATLIBOI LTD ROOTS COOLING SYSTEMS PVT. LTD APC AIR SYSTEM WOLLAQUE VENTILATION & CONDITIONING	accepted. We propose Following Standard PQR i) The bidder should have designed, supplied, erected/got erected/supervised erection and commissioned at least one (1) number ventilation system in power station/ industrial/commercial installations, consisting of Centrifugal Fans having individual fan capacity of 75,000CMH at least or more, along with associated ducting work etc. The system should have been running satisfactorily for at least one (1) year from the date of commissioning/completion/ handover as on date of bid opening.. ii) Should be an ISO certified company. Kindly accept.	
125	Volume V Attachment 5A, 5B		33.1	Erection/Installation Services Specific qualification criteria Note: 4: Hydro Power stations cover conventional hydro power stations as well as Pump Storage Plants.	Note: 4: Vendors having credentials of LIS (Lift irrigation scheme) and R&M of hydro power plant with complete replacement of turbine (except embedded parts) & Generator may also be considered technically qualified. Employer is requested to kindly confirm.	Tender provisions are clear in this regard.

Sl. No.	Volume	Page No.	Clause No.	Tender Provision	Queries / Clarification	NHPC REPLY
126	Volume-III A (GTS) ANNEX 2	8,10	REQUIRED DOCUMENTS FOR E&M EQUIPMENT	**3. DIGITAL GOVERNOR SYSTEM AND ACCESSORIES** 2 Govrning system calculation note 3 Design calculation of OPU 4 Design calculation of receiver 5 Design calculation of sump 6 Design calculation of pumps **4. MAIN INLET VALVE AND ACCESSORIES** 8 Main inlet valve - OPU system calculation and sizing 9 Main inlet valve - Design calculation of sump 10 Main inlet valve - Design calculation of receiver 11 Main inlet valve - Design calculation of pumps	Against sl.no. 2, 3, 4, 5 & 6, Design calculation of Gov OPU system shall be submiited which will include Design calculation of OPU system sub-items i.e. Oil sump tank, pumps of sump tank, Piston accumulator & Nitrogen bottle bank. Against sl.no. 8, 9,10 & 11, Design calculation of MIV OPU system shall be submiited which will include Design calculation of OPU system sub-items i.e. Oil sump tank, pumps of sump tank, Piston accumulator & Nitrogen bottle bank	Tender provisions are clear in this regard.
127	Volume-III A (GTS) ANNEX 2	8	REQUIRED DOCUMENTS FOR E&M EQUIPMENT	**3. DIGITAL GOVERNOR SYSTEM AND ACCESSORIES** 7 Governing system Functional diagram 8 Governor- general arrangement drawings 10 Foundation details-HMC 20 Governor- Cubicle Wiring	Against sl.no. 7, 8 & 20, Hydraulic scheme, general arrangement drawing & Wiring diagram of HMC (Hydro Mechanical cabinet) shall be submitted. Foundation details of HMC shall be covered in general arrangement drawing.	Tender provisions are clear in this regard.
128	Volume-III A (GTS) ANNEX 2	8	REQUIRED DOCUMENTS FOR E&M EQUIPMENT	**3. DIGITAL GOVERNOR SYSTEM AND ACCESSORIES** 9 Foundation details- OPU & Sump 11 Governing system- Pressure tank-General layout 12 Governing system- Sump tank-General layout 13 Piping - General Layout	General arrangement drawings (including Foundation details) of Pressure tank/ Piston accumulator & Oil sump tank shall be submitted. Internal piping arrangement for Governing system assemblies i.e. HMC, Oil sump tank, Piston accumulator & Nitrogen bottle bank shall be indicated in the General arrangement drawings of respective assembly.	Tender provisions are clear in this regard.
129	Volume-III A (GTS) ANNEX 2	8	REQUIRED DOCUMENTS FOR E&M EQUIPMENT	14 Turbine instrument & monitoring diagram	Turbine Instruments shall be indicated in DCG of Turbine. No separate diagram envisaged.	Tender provisions are clear in this regard.
130	Volume-III A (GTS) ANNEX 2	8,10	REQUIRED DOCUMENTS FOR E&M EQUIPMENT	**3. DIGITAL GOVERNOR SYSTEM AND ACCESSORIES** 15 Governor-Inputs and Outputs list 16 Governor- feedback mechanism 23 Specification of instruments and devices for OPU system **4. MAIN INLET VALVE AND ACCESSORIES** 43 Specification of instruments and devices for OPU system	Governor input & output list shall be covered in scheme of EHGC hence separate document submission shall not be required. Detail of instruments & devices shall appear in the bill of material of GA drg. of respective assemblies hence separate document is not required.	Tender provisions are clear in this regard.
131	Volume-III A (GTS) ANNEX 2	8	REQUIRED DOCUMENTS FOR E&M EQUIPMENT	**3. DIGITAL GOVERNOR SYSTEM AND ACCESSORIES** 25 Arrangement of PLC and other modules 26 Internal logic diagram of PLC module	PLC not applicable for proposed Governing system.	Tender provisions are clear in this regard.
132	Volume-III A (GTS) ANNEX 2	8	REQUIRED DOCUMENTS FOR E&M EQUIPMENT	**3. DIGITAL GOVERNOR SYSTEM AND ACCESSORIES** 17 Storage Manual (to be submitted to site for approval) 33 O & M Manual	Sub-vendor O& M Manual (containing storage and erection instructions) shall be submitted for EHGC, HMC, Oil sump tank, Piston accumulator & Nitrogen Bottle Banks.	Tender provisions are clear in this regard.
133	Vol I (IFB) Annexure-1		Construction Schedule/ Milestones-E&M Works	Boxing Up	Construction schedule specifies boxing up as miletsone. We request NHPC to kindly clarfiy the defintion of the same for better clarity during execution.	Please adhere to bid specifications
134	Volume-IIA (GCC)		8.2 Time for Commencement, Completion and Taking Over	....time stated in the Contract or within such extended time to which the Contractor shall be entitled under GCC Clause 40....	Contract cannot be for an indefinite period, especially when the delays are not attributable to Contractor. NHPC is requested to kindly quantify the duration of extended period, after which the quoted prices may not be sustainable. Post such period, Terms and conditions (including price) shall be agreed mutually.	Please adhere to bid specifications

Sl. No.	Volume	Page No.	Clause No.	Tender Provision	Queries / Clarification	NHPC REPLY
135	Volume-IIA (GCC)		**27**	Defect Liability	For specified spares the storage is not envisaged, these may be taken over by employer upon receipt at site under first contract. DLP to start on prorata receipt in employer stores. Kindly review and confirm.	Does not pertains to Design (E&M)
136	BOO Volume 1118 (GTR)		**BOQ 1.11 Miscellaneous items**	Porta Cabin Sustainable bio-toilets Special software	We request NHPC to kindly clarify the following:- - BOQ No. under which the prices are to be quoted while submisison of bid - Classification of these items for 'Price adjustment' during execution	Kindly refer amendment
137	Volume-0 1TB		**25. Commercial Evaluation 25.3 b)**	(b) Time schedule (program of performance) Bidders are required to **base their prices** on the time schedule given in Appendix 4 to the form of Contract Agreement (Time Schedule).	We request NHPC to kindly clarify the purpose of this clause in Commercial evaluation.	Please adhere to bid specifications
138	Volume-IIA (GCC)		**Annex-A to GCC**	Valuation of Idling Time Cost Claims The cost under this head is to be limited maximum upto 2% off composite contract price, within the cap of 4%, as calculated by the formula as mentioned under Sl. No. (1) above but against documentary evidence only.	In the past hydro projects, there has been -substantial delays in execution for reasons not attributable to E&M contractor. In such scenario, ceiling of 4% / 2% shall not be sufficient to compensate E&M contractor expenses. In view of above, Employer is requested to define time period till when this ceiling of 4% / 2 % is applicable.	Please adhere to bid specifications
139	**Vol-III B (Particular Technical Specification)**	**249 of 1070**	**2.5.3**	Material for Rotating & Fixed labyrinth (Upper & Lower) .	Please allow the bidder to supply the labyrinths of Stainless steel castings(ASTM A 743 Grade CA6NM). Kindly accept.	Tender provisions are clear in this regard.

NHPC Limited
URI-I STAGE-II HYDROELECTRIC PROJECT (240 MW)
Tender Specification No.: NH/Conts(EnM)-III/Uri-I Stage-II/ENM/2026/01
Replies to Pre-Bid Queries (Technical Query)-Part-B

SR. NO.	Volume	Clause no	Clause name	Page No	Description as per Bid Document	Remarks - Query/ Clarification	NHPC REPLY
					Hydraulic		
1	Vol-III B (Particular Technical Specifications (PTS)), TURBINE AND ACCESSORIES	2.2.2	Hydraulic Conditions	PDF Page 28 of 640	iii Maximum tail water level (with all unit operation at full load) : EL 1241.00 M iv Minmum tail water level (with one unit running at no load) : EL 1241.00 M	During load variation, it is expected to vary the tail water level due to change in the discharge and hence water column height at TRT exit. Hence, we kindly request you to review the specified tail water level and reconfirm the TWL corresponding to- 1. TWL corrsponding to all unit in operation at full load 2. TWL corrseponding to one unit in operation at full load 3. TWL corresponding to one unit running at no load	Tender provisions are clear in this regard.
2	Vol-III B (Particular Technical Specifications (PTS)), TURBINE AND ACCESSORIES	2.2.2	Hydraulic Conditions	PDF Page 29 of 640	ix. Operating range of net heads: a. Rated Net Head : 227 m b. Maximum Net Head : 227 m c. Minimum Net Head : 227 m	Rated net head (227 m) is defined based on the FRL EL 1491m & TWL EL 1241.0m and 23m head loss corrsponding to both unit running at rated condition. However, while 1 unit in operation, the head loss thru the waterconductor system shall be less and effcetive net head at unit will increase. So maximum net head and rated net head can not be same. In view of the same, kinldy review the specifed net head and confirm the head as mentioned below: 1) Rated net head (while both unit in operation at full load & at FRL condition) 2) Maximum net head (while one unit in operation at full load & at FRL condition) 3) Minimum net head (while both unit in operation at full load and operating at MDDL (if any))	Tender provisions are clear in this regard.
3	Vol-III B (Particular Technical Specifications (PTS)), TURBINE AND ACCESSORIES	2.3.3. and 2.5.4.1	Pressure Rise and Speed Rise and Spiral case	PDF Page: 31 & 39 of 640	The maximum pressure rise at turbine inlet, considering the effect of water hammer under worst conditions of load acceptance/rejection and governor closing/opening times shall be indicated by the Contractor. However, the pressure rise shall not be more than 29% of the static head at 262.3 Head and speed rise shall not be more than 55% of the synchronous speed i.e., 333.33 rpm under any worst condition. and The spiral case shall be designed for minimum internal design pressure of 38 bars.	The specified pressure rise limit of 29% of maximum static head is still at lower side. Also, it is not matching with the pressure rating (38 bar) specified for design of turbine and Main inlet valve. Hence, we propose to keep the maximum pressure rise limit up to 38 bar. Kindly confirm.	Tender provisions are clear in this regard.
4	Vol-III B (Particular Technical Specifications (PTS)), TURBINE AND ACCESSORIES	2.4.3	Cavitation pitting guarantee	PDF Page: 33 of 640	If any of the runner passages or any individual turbine component seperately listed above fails to meet the above guarantee, the contractor shall at his own expense, repiar the pitting area by welding and also repair in a satisfactory manner all other areas..... .....Subsequent to repair, the repaired runner and turbine components will be subject to teh above pitting guarantee for another period of 8000 operation hours of power production. The guarantee will be renewed each time the turbine fails to meet the guarantee.....	We understand that the cavitation guarantee shall be renewed if the turbine fails to meet the guarantee but the maximum warranty period shall be limited/ capped inline to the "clause 27 Defect Liabillity of Vol II A - GCC". Kindly confirm.	Tender provisions are clear in this regard.

SR. NO.	Volume	Clause no	Clause name	Page No	Description as per Bid Document	Remarks - Query/ Clarification	NHPC REPLY
5	Vol-III B (Particular Technical Specifications (PTS)), TURBINE AND ACCESSORIES	2.4.6.5	Model Acceptance	PDF Page: 37 of 640	3) Should the model fails to meet the requirement of guarantee and other requirements, the contractor shall modify the same untill it complies with the requirements. All expenses involved for the modification and subsequent model tests shall be borne by the contractor.	As per the tender spcification, revolving model test guarantee is required. We kindly resquest you to modify the model acceptance clause as below to define the capping in case of any shortfall. "3.Should the model fails to meet the requirement of guarantees and other requirements, the penalty shall be imposed as per LD defined in "caluse 2.4.4 of Vol III B-PTS" upto shortfall in WAE of 0.5% after applicable IEC tolerances. Below the 0.5% shortfall, it shall be optional for the Engineer-of-Contract to conditionally accept the model and direct the Contractor to modify the model. All expenses involved for the modifications and subsequent model tests shall be borne by the Contractor. If the contractor is able to achieve maximum guaranteed efficiency or more as mentioned in the bid during field acceptance test, penalty imposed on account of shortfall in efficiency during model test shall be waived off."	Tender provisions are clear in this regard.
6	VOLUME – IV: Tender Drawings		GENERAL			The waterways and PH layout drawing shared in the Vol IV - Tender darwings are not clear to consider the data for transient analysis point of view. We kindly request to share the drawings listed as below in AutoCAD format for further conisderation. 1. Wateways L section (from Intake to TRT Exit) 2. Waterways cross section of each type of tunnel/ penstock 3. Upstream surge shaft cross section/ plan and flow coefficient 4. Downstream surge gallery cross section/ L section/ plan and flow coefficient 5. PH layout - Cross section, Longitudinal section and Plan	Shall be dealt during detail engineering
Turbine							
1	Vol-III B (Particular Technical Specifications (PTS)), GENERAL TECHNICAL REQUIREMENTS	1.5.1.1	Maximum allowable stresses	PDF Page: 7 of 640	ii) Direct or combined steady stresses For materials used in the construction of the equipment, unless otherwise specified, the maximum stress due to maximum normal rated load operating conditions shall not exceed one-third of the minimum yield point or one-fifth of the minimum ultimate strength of the material, which ever is lower. Maximum unit stresses in rotating parts of the turbine due to maximum runaway speed or in parts under hydrostatic test conditions shall not exceed two-thirds of the minimum yield point.	The design stress limit shall be followed as for the conditions occurring in normal operation shall not exceed one-half (1/2) of the yield strength of the material and for the most severe operating conditions like pressure test and runaway speed etc. the stresses shall not exceed three-fourth (3/4) of the yield strength. For other materials used in the construction of the turbine and associated equipment, the maximum stresses in tension or compression due to the most severe conditions occurring in normal operation shall exceed one-half (1/2) of the yield strength of the material. Please review the requirement and confirm the above mentioned stress criteria as followed for the hydro turbines world wide based on the advanced tool/ software's calculations.	Tender provisions are clear in this regard.

SR. NO.	Volume	Clause no	Clause name	Page No	Description as per Bid Document	Remarks - Query/ Clarification	NHPC REPLY
2	Vol-III B (Particular Technical Specifications (PTS)), GENERAL TECHNICAL REQUIREMENTS	1.5.1.4	Silt erosion consideration	PDF Page: 9 of 640	The project is situated in Himalayan region where the silt content during high flow period is excessive and peaks abnormally during high flood. Sediments of Himalayan Rivers may contain high quartz content. The underwater components are expected to operate under silt concentration up to 3000 ppm.	It is not recommended that the underwater turbine components shall be operated under silt concentration up to 3000 ppm. This limit shall be mutually discussed and agreed during the detail Engineering. Please review the requirement.	Tender provisions are clear in this regard.
3	Vol-III B (Particular Technical Specifications (PTS)), GENERAL TECHNICAL REQUIREMENTS	1.9.1	Special tools	PDF Page: 20 of 640	The tools and plants like mobile crane, trailer, truck, hydraulic jacks, welding generators, hydraulic test pumps, drill machines, torque wrenches, chain pulley blocks, dewatering pumps, HV testing kit, Drying out transformer, brazing equipment etc., shall be arranged by the contractor.	Please confirm the requirement of Trailer, Trucks etc. ..	Tender provisions are clear in this regard.
4	Vol-III B (Particular Technical Specifications (PTS)), GENERAL TECHNICAL REQUIREMENTS	1.11.4	Special software	PDF Page: 22 of 640	(ii) Simulation and design Software tool for designing of Hydro Power units / turbines having following capabilities:- * Modelling, Simulation and analysis of the power networks dynamic behavior, speed drives and hydraulic systems with arbitrary topology. * Design and Analysis of water Conductor system * Water Hammer Calculation/Rotating inertias,/ Hydraulic Transient Studies including speed rise, pressure rise, guide vane opening/ closing time in seconds * Electrical Transient Studies including transients in 4-quadrant operation * Designing/ Dimensioning / Sizing of turbine-generators bearing arrangement, suction head, unit spacing, rated rpm, etc. The software should have the ability to include all the above components into simulation. (iii) 2D and 3D Computer aided design software for preparation and review of drawings for approval.	As the software License are proprietary things, the same cannot be shared. The same can be procured from sources available in the market directly by Customer. Kindly review the clause and remove this requirement.	Tender provisions are clear in this regard.
6	Vol-III B (Particular Technical Specifications (PTS)), TURBINE AND ACCESSORIES	2.5.3	Material selection and standards	PDF Page: 38 of 640	4. Rotating labyrinth (Upper & Lower) — Forged Stainless Steel — ASTM A473 UNS S41500 5. Fixed labyrinth (Upper & Lower)	Forged/ Casted/ Plate material of ASTM A 743 CA6NM material shall be considered for the labyrinths ring as per the	Tender provisions are clear in this regard.

SR. NO.	Volume	Clause no	Clause name	Page No	Description as per Bid Document	Remarks - Query/ Clarification	NHPC REPLY
7	Vol-III B (Particular Technical Specifications (PTS)), TURBINE AND ACCESSORIES	2.5.3	Material selection and standards	PDF Page: 38 of 640	8. Discharge ring | Stainless Steel, 13Cr-4Ni, | ASTM A240 UNS S41500	As discharge ring is the integral part of the bottom ring, therefore its material shall be the same as for bottom ring i.e. S355 J2/ IS 2062 E350 / Equivalent. However, suitable length of the upper cone of draft tube would be of stainless steel material for the application requirement.	Tender provisions are clear in this regard.
8	Vol-III B (Particular Technical Specifications (PTS)), TURBINE AND ACCESSORIES	2.5.4.1	Spiral case	PDF Page: 39 of 640	The spiral case shall be designed for minimum internal design pressure of 38 bars. Five (05) mm corrosion and abrasion allowance in the thickness of spiral casing shall be taken.	Five (05) mm corrosion and abrasion allowance is on higher side, it shall be (02) mm for the medium head Francis Turbine. Please review the requirement.	Tender provisions are clear in this regard.
9	Vol-III B (Particular Technical Specifications (PTS)), TURBINE AND ACCESSORIES	2.5.4.1	Spiral case	PDF Page: 40 of 640	A watertight casing manhole shall be provided. The clear manhole opening shall be 750 mm wide.	The clear manhole opening shall be of diameter 600 mm.	Kindly refer amendment in this regard.
10	Vol-III B (Particular Technical Specifications (PTS)), TURBINE AND ACCESSORIES	2.5.4.2	Stay Ring	PDF Page: 40 of 640	At least three drains suitably distributed in stay vanes shall be provided from the turbine pit through drain holes in the stay vanes.	The holes in stay vanes shall not be provided as it would lead the weakening of the stay vanes and overall inlet parts strength. Hence holes are not considered in stay vanes.	Tender provisions are clear in this regard.
11	Vol-III B (Particular Technical Specifications (PTS)), TURBINE AND ACCESSORIES	2.5.4.3	Draft tube liner	PDF Page: 41 of 640	Minimum Limit of supply of Draft Tube liner shall be tentatively 13700 mm (refer drawing no. NH/DEM/ URI I STG II /PH/01) from the unit centre line or up to the point where velocity is 4.0m/sec, whichever is higher.	Minimum Limit of supply of Draft Tube liner shall be tentatively 13700 mm (refer drawing no. NH/DEM/ URI I STG II /PH/01) from the unit centre line or up to the point where velocity is 5.0m/sec, whichever is higher. Please review the requirement as 4.0 m/s velocity is lower side.	Tender provisions are clear in this regard.
12	Vol-III B (Particular Technical Specifications (PTS)), TURBINE AND ACCESSORIES	2.5.4.4	Pit liner	PDF Page: 42 of 640	The vertical pit liner plate wall shall not be less than 16mm thick.	The vertical pit liner plate wall shall be in the range of 10 to 12 mm thickness. 16 mm thickness is on higher side. Please review the requirement.	Tender provisions are clear in this regard.
13	Vol-III B (Particular Technical Specifications (PTS)), TURBINE AND ACCESSORIES	2.5.5.1	Draft tube cone	PDF Page: 42 of 640	Two (2) watertight and air tight diametrically opposite manhole doors,having a clear opening of at least 750X750 mm, shall be provided in the draft tube cone.	One number of man hole is sufficient for the all inspection and maintenance purpose in the draft tube cone. Please review the requirement.	Kindly refer amendment in this regard.
14	Vol-III B (Particular Technical Specifications (PTS)), TURBINE AND ACCESSORIES	2.5.5.2	Head cover	PDF Page: 43 of 640	Design of facing plates shall be such that the replacement of the same shall be carried out without removal of Top Cover. The head cover shall be designed to pass through the wound generator in one piece during erection and dismantling and with the runner and shaft in place.	If head cover would be designed in two or more sections then it is recommended that it shall be pass through the wound generator in sections keeping the generator lower bracket cover size into consideration. However, it would be easily dismantle and assemble in sections. Please review the requirement and confirm.	Tender provisions are clear in this regard.
15	Vol-III B (Particular Technical Specifications (PTS)), TURBINE AND ACCESSORIES	2.5.6.1	Runner	PDF Page: 49 of 640	However, in view of high anticipated silt concentration runner blade thickness at outlet edges shall be approx. 30% more than the optimum design.	Blade thickness shall be considered as per the bidder standard design practice. 30% more thickness for blade is on very higher side considering the hydraulic main hydraulic path of the machine.	Tender provisions are clear in this regard.
16	Vol-III B (Particular Technical Specifications (PTS)), TURBINE AND ACCESSORIES	2.5.6.2	Turbine shaft	PDF Page: 50 of 640	The shaft shall be hollow having a diameter of at least 150 mm throughout its entire length and shall have a general outside surface finish of approximately 3.2 micrometers Ra.	3.2 micrometers Ra for the shaft bore is too high considering there is no design/ application requirement. Please review the requirement.	Tender provisions are clear in this regard.

SR. NO.	Volume	Clause no	Clause name	Page No	Description as per Bid Document	Remarks - Query/ Clarification	NHPC REPLY
17	Vol-III B (Particular Technical Specifications (PTS)), TURBINE AND ACCESSORIES	2.5.6.3	Turbine guide bearing	PDF Page: 50 of 640	For at least (15) minutes at any speed up to 110 percent rated speed and maximum load, without cooling water supply. For fifteen (15) minutes at any speed up to maximum runaway speed, with cooling water supply.	Turbine Guide bearing shall be designed as below to keep the compact design of the bearing system of the power unit. For at least ten (10) minutes at any speed up to 110 percent rated speed and maximum load, without cooling water supply. For five (5) minutes at any speed up to maximum runaway speed, with cooling water supply. The requirement for 15 minutes on higher side, Please review the requirement and confirm.	Tender provisions are clear in this regard.
18	Vol-III B (Particular Technical Specifications (PTS)), TURBINE AND ACCESSORIES	2.5.6.4	Shaft seals	PDF Page: 52 of 640	The seal shall be so arranged that it may be serviced without disturbing the bearing or dewatering the draft tube.	It shall be noted that the partial dismantling of the turbine guide bearing is required to service the shaft seal. Also, from safety point of view, de-watering of the draft tube is required as considerable head will act on the shaft seal from tail race side during the maintenance/ inspection of the shaft seal.	Tender provisions are clear in this regard.
19	Vol-III B (Particular Technical Specifications (PTS)), TURBINE AND ACCESSORIES	2.5.7.4	Turbine pit hoist	PDF Page: 55 of 640	Each turbine pit shall be equipped with the necessary lugs and circular monorails having two nos. cross beams and two hoists covering the entire pit from turbine guide bearing housing to PCD of wicket gate to facilitate easy replacement of all equipment.	It shall be noted that the turbine pit hoist shall be used to handle/ facilitate the small turbine parts like guide vane, shaft seal parts and guide bearing parts etc. The major turbine parts would be handled by the Power House crane only.	Tender provisions are clear in this regard.
20	General				Water Quality Report	Please provide the water quality report with respect to the PH Value, TDS, Electrical conductivity and chloride concentration etc.	Kindly fefer Annexure-II & III of IFB Vol-I
					MIV		
1	Vol-III B (Particular Technical Specifications (PTS)), Main Inlet Valve and Accessories	4.2.2	Operating conditions	PDF Page 95 of 640	Depending upon operating requirements, the valve shall be either fully open or fully closed and no partial opening of the valve is envisaged. The normal opening and closing of the main inlet valve shall be by hydraulically operated double acting servomotors. Provision shall also be made to close the main inlet valve by counter weight only in the worst possible condition.	Voith propose following operation :- 1) Normal Opening : By oil operated servomotor 2) Normal & Emergncy closing : By Counter weight	Tender provisions are clear in this regard.
2	Vol-III B (Particular Technical Specifications (PTS)), Main Inlet Valve and Accessories	4.2.2	Operating conditions	PDF Page 95 of 640	Depending upon operating requirements, the valve shall be either fully open or fully closed and no partial opening of the valve is envisaged. The normal opening and closing of the main inlet valve shall be by hydraulically operated double acting servomotors. Provision shall also be made to close the main inlet valve by counter weight only in the worst possible condition. The valve shall be capable of closing against maximum head, including water hammer for maximum turbine discharge at all operating conditions including runaway with normal working stress on all parts.	Kindly consider below clarification. Design of valve will be perfomed for 2 times of maximum turbine discharge at water hammer condition including runaway.	Tender provisions are clear in this regard.

SR. NO.	Volume	Clause no	Clause name	Page No	Description as per Bid Document	Remarks - Query/ Clarification	NHPC REPLY
3	Vol-III B (Particular Technical Specifications (PTS)), Main Inlet Valve and Accessories	4.2.3.1	Operating conditions	PDF Page 97 of 640	Opening of the valve at 50% unbalance and closing at 100% unbalance condition.	Voith request for Opening of the valve at 40% unbalance and closing at 100% unbalance condition.	Tender provisions are clear in this regard.
4	Vol-III B (Particular Technical Specifications (PTS)), Main Inlet Valve and Accessories	4.5.3	Material selection & standards	PDF Page 99 of 640	S.No. 1 | Item: Body | Material: Carbon steel | Material Standard: ASTM A537 class 1 or ASTM A216Gr WCC	Voith will provide casting + Fabricated designed Valve Body with S355 J2 +N for fabricated material and ASTM A216 Gr WCC for casting material . Kindly accept Voith proposal .	Tender provisions are clear in this regard.
5	Vol-III B (Particular Technical Specifications (PTS)), Main Inlet Valve and Accessories	4.5.3	Material selection & standards	PDF Page 99 of 640	S.No. 2 | Item: Rotor | Material: Carbon steel | Material Standard: ASTM A537 class 1 or ASTM A216Gr WCC	Voith will provide casting + Fabricated designed Valve Body with S355 J2 +N for fabricated material and ASTM A216 Gr WCC for casting material . Kindly accept Voith proposal .	Tender provisions are clear in this regard.
6	Vol-III B (Particular Technical Specifications (PTS)), Main Inlet Valve and Accessories	4.5.3	Material selection & standards	PDF Page 99 of 640	S.No. 3 | Item: Trunnions | Material: Carbon steel | Material Standard: ASTM A216Gr WCC	Forging EN10250-4 Grade-X3CrNiMo13-4 Plate ASTM 240 Type UNS41500 as trunnion sleeve	Tender provisions are clear in this regard.
7	Vol-III B (Particular Technical Specifications (PTS)), Main Inlet Valve and Accessories	4.5.3	Material selection & standards	PDF Page 99 of 640	S.No. 4 | Item: Connection Sleeve/ extensions | Material: Carbon steel, | Material Standard: ASTM A537 class 1	Voith will provide fabricated design for upstream & downstream extensions with S355 J2 +N/Equivalvent for fabricated material. Kindly accept Voith proposal .	Tender provisions are clear in this regard.
8	Vol-III B (Particular Technical Specifications (PTS)), Main Inlet Valve and Accessories	4.5.3	Material selection & standards	PDF Page 99 of 640	S.No. 5 | Item: Permanent seat of seal, seal retainers, service seal and maintenance seal. and fasteners | Material: Forged Stainless steel, 13Cr-4Ni | Material Standard: ASTM A473 UNS S41500	Seal and seat both be of stainless steel material. Exact material will be confirmed during Detail Engineering .	Tender provisions are clear in this regard.
9	Vol-III B (Particular Technical Specifications (PTS)), Main Inlet Valve and Accessories	4.5.3	Material selection & standards	PDF Page 99 of 640	S.No. 7 | Item: Servomotor cylinder | Material: Carbon Steel Seamless Pipe | Material Standard: DIN 2391 (Part-2) ST52	Servomotor barrel (Seamless tube) will be of E355 (EN10297-1)	Tender provisions are clear in this regard.

SR. NO.	Volume	Clause no	Clause name	Page No	Description as per Bid Document	Remarks - Query/ Clarification	NHPC REPLY
10	Vol-III B (Particular Technical Specifications (PTS)), Main Inlet Valve and Accessories	4.5.9.2	Penstock drainage system	PDF Page 104 of 640	The penstock shall be drained through turbine up to tail water level. In order to evacuate the remaining quantity of water, a penstock drainage system shall be installed. One no. heavy duty gate valve of suitable size and made of forged or cast steel along with one additional guard valve at upstream shall be provided. An additional suitable thruster compensator arrangement of pressure rating not less than PN40 shall be installed to cater any vibration. The drain arrangement shall have adequate flexible telescopic coupling arrangement to cater the thermal expansion/ contractions of the penstock.	In place of thruster compensator voith will provide 2 nos of gate valve & 1 nos of flexible joint. Kindly accept Voith proposal .	Tender provisions are clear in this regard.
Generator							
	Vol-III B (Particular Technical Specifications (PTS)), Generator	5.3.1	Rating	PDF Page 119 of 640	6) Power factor, (cosφ) lagging 0.85 ..... 10) Short circuit ratio - Not less than 1.05 at 0.85 pf ..... 13) Maximum permissible temperatures under rated Power (141.2 MVA) at 0.85 p.f at rated voltage and rated frequency with ambient temperature 40ºC and cooling water inlet temperature 30ºC	As per amendment (Technical_D_Amndment_01) issued dated 28-07-2025, power factor is considered as 0.9 however, in the latest PTS it mentioned as 0.85, we request you to please amend the power factor as 0.90 in PTS.	Kindly adhere to tender specification.
	Vol-III B (Particular Technical Specifications (PTS)), Generator	5.4.2	Guaranteed efficiency	PDF Page 122 of 640	The guaranteed weighted average efficiency, at rated voltage and frequency as determined from the following formula, shall not be less than 98.5 percent.	Considering the weighing factors, the expected WAE is quite high, we propose to make it 98%. kindly accept.	Kindly adhere to tender specification.
	Vol-III B (Particular Technical Specifications (PTS)), Generator	5.5.8	Main shaft and coupling	PDF Page 127 of 640	The contractor shall calculate the critical speed of the combined turbine and generator rotating parts and first critical speed shall be at least 25% above the runaway speed.	As per global practice in hydro, first critical speed can be at least 20% above the maximum runaway speed. Also as per IEC 60034-33 standard, it is 10%. VH also recommends this value as 20%. Kindly accept.	Kindly adhere to tender specification.
BOPE							
1	Volume-IV Tender drawings				Location of 400kV pothead yard and the 400kV cable tunnel up to pothead yard from Transformer cavern is required for cable estimation. Please provide autocad drg of SLDs and layout		Shall be dealt during detail engineering
2	Vol-III B (Particular Technical Specifications (PTS)), GSU Transformers	8.5.25	Oil soak pit	PDF Page: 190 of 640	The Scope of E&M contractor shall be connecting pipes from soak pit to main header and main header connection pipe from oil soak pit to oil water separator sump.	Please note that bidder will consider MS pipe for the same . Design of oil water separator sump is not in the scope of bidder. Grating over the soak pit of transformer is not in bidder scope of supply.	Tender provisions are clear in this regard.
3	Vol-III B (Particular Technical Specifications (PTS)), XLPE Cables	10.1.1	XLPE Cables	PDF Page: 219 of 640	Eight(8) nos , single phase ,400kV copper conductor , fiber optic embedded XLPE cables of minimum 2000 Sqmm for interconnection with two out going bays…...	Please mention the length of cable to be considered, layout is not clear to estimate the cable length.	Tender provisions are clear in this regard. However, for route length of XLPE cable between Uri-I & Uri-I stage-II kindly refer civil drawing no. NHUR-I(II)-4CT1-41-GA-052-00. For route length of XLPE cable between Uri-I Stage-II & existing Pothead yard kindly refer tender civil drawing NHUR-I(II)-4AT1-41-GA-004-00 , NHUR-I(II)-4CT1-41-GA-043-00 and NHUR-I(II)-4AT1-41-GA-064-00 The above lenghts are tentative & shall be finalised during detail engineering.

SR. NO.	Volume	Clause no	Clause name	Page No	Description as per Bid Document	Remarks - Query/ Clarification	NHPC REPLY
4	Volume-IV Tender drawings (220V DC Station Service Drg no NH/ DEM/URI/STG II/DC/01)			PDF Page: 12 of 42	All outgonig feeders are shown with MCCB feeders	All outgonig feeders are shown with MCCB feeders, requested to consider MCB feeders for control supply to panels , As these are small load feeders considering MCCB to these feders will increase the size of DC board drastically.	Kindly adhere to tender specification.
BOPM							
1	Vol-III B (General Technical Specifications (GTS))	5.7.1	General	PDF Page: 32 of 106	Unless otherwise stated, all piping fitting, valves shall be designed for at least 1.5 times of the working pressure but minimum for nominal pressure PN16 and tested with 1.5 times of the design pressure.	All piping, fitting & valves shall be teste at 1.5 times of the design pressure of respective system, kindly accept.	Tender provisions are clear in this regard.

SR. NO.	Volume	Clause no	Clause name	Page No	Description as per Bid Document	Remarks - Query/ Clarification	NHPC REPLY
2	Vol-III B (General Technical Specifications (GTS))	5.7.2	Valves	PDF Page: 33 of 106	Valve body for oil pipes	For high pressure oil application, carbon steel valve body is acceptable, kindly review the requirement.	Kindly adhere to tender specification.
3	Vol-III B (General Technical Specifications (GTS))	5.7.3	Piping & fittings	PDF Page: 34 of 106	All water and oil pressure pipes shall be seamless type.	For water application, where working pressure is less as compared to high pressure oil application, ERW type pipes shall be used and for oil pressure pipes shall be seamless type, kindly accept.	Kindly adhere to tender specification.
4	Vol-III B (Particular Technical Specifications (PTS)), Digital Governing system and accessories	3.1.2, 1), b)	Oil pumping unit	PDF Page: 67 of 640	Dual oil filtration unit with changeover facility along with clogging indication	Filter change over shall be through manual valve. Please confirm	Kindly adhere to tender specification.
5	Vol-III B (Particular Technical Specifications (PTS)), Digital Governing system and accessories	3.1.2, 2)	Oil pumping unit	PDF Page: 68 of 640	Two (2) sets of oil leakage unit, if required	Please be noted that all return lines for servomotor shall be directly connected with main HPU tank so oil leakage unit is not required, please accept.	Tender provisions are clear in this regard.
6	Vol-III B (Particular Technical Specifications (PTS)), Digital Governing system and accessories	3.1.2, 4)	Oil pumping unit	PDF Page: 68 of 640	One (1) set of Nitrogen charging kit.	Nitrogen changing kit consist of the requisite hose, adaptor and necessary manifold with isolation valve etc. Same is part of the commissioning spares and shall be supplied along with main system and is common for the plant. Kindly confirm the requirement.	Tender provisions are clear in this regard.
7	Vol-III B (Particular Technical Specifications (PTS)), Digital Governing system and accessories	3.3.3	Capacity	PDF Page: 73 of 640	The rating/capacity of the hydraulic system of the governing system shall not be less than the capacity of the servomotors for operation of the turbine guide vanes.	The rating/capacity of the hydraulic system pumps of the governing system shall not be less than the capacity of the servomotors for operation of the turbine guide vanes, please confirm	Kindly adhere to tender specification.
8	Vol-III B (Particular Technical Specifications (PTS)), Digital Governing system and accessories	3.3.3	Capacity	PDF Page: 73 of 640	The maximum oil velocity in the pressure pipes lines shall not exceed 3 m/s and 1.5 m/s in return lines.	It is proposed to size the piping as per IEEE 1207, kindly accept.	Kindly adhere to tender specification.
9	Vol-III B (Particular Technical Specifications (PTS)), Digital Governing system and accessories	3.3.3	Capacity	PDF Page: 73 of 640	The governor oil pressure system shall be designed for the extreme case of closing, opening and final closing of the guide vanes with both oil pumps and nitrogen/oil system inoperative.	The governor oil pressure system shall be designed for the extreme case of closing, opening and final closing of the guide vanes with both oil pumps inoperative, please confirm	Tender provisions are clear in this regard.
10	Vol-III B (Particular Technical Specifications (PTS)), Digital Governing system and accessories	3.5.7.4	Oil sump tank	PDF Page: 89 of 640	The sump tank shall be provided with a manhole of 500 mm diameter with a suitable oil resistant gasket for access to the interior of the tank.	Practically as per the current industry practice, size of manhole with 500 mm Dia is not possible. Kindly update the clause as sufficient diameter manhole for the maintenance requirement to be provided. It shall be of about 400 mm.	Tender provisions are clear in this regard.
11	Vol-III B (Particular Technical Specifications (PTS)), Digital Governing system and accessories	3.5.7.4, A)	Proportional valve oil filtering	PDF Page: 89 of 640	Suitable dual on line oil filter with changeover and clogging indication shall be provided in actuator supply circuit to ensure that impurities as recommended by the manufacturer are avoided. .	Two Type of filters shall be provided in the HPU system ; 1. Pressure Line Filter (1W+1S) in pressure line to the main manifold & Accumulator. 2. Offline circuit filter to clean the oil continuously All Filters shall be provided with suitable indication to give alarm in case of filter cloggin, kindly accept	Tender provisions are clear in this regard.
12	Vol-III B (Particular Technical Specifications (PTS)), Digital Governing system and accessories	3.5.8.2	Construction and safety features	PDF Page: 90 of 640	The Piston accumulator shall be constructed from plate steel conforming to EN 10028-3 P355NL1 or equivalent in accordance with part UW of the ASME Code for Unfired Pressure Vessels, Section VIII, for the maximum working pressure of the governing system.	Piston accumulator shall be designed and tested in accordance with the pressure equipment directive (PED) - 2014/68/EU. Please accept.	Kindly refer amendment in this regard
13	Vol-III B (Particular Technical Specifications (PTS)), Digital Governing system and accessories	3.5.8.2	Construction and safety features	PDF Page: 90 of 640	The accumulator shall be equipped with a pressure gauge, a safety relief valve, pressure transducer, oil level sight gauges, metallic magnetic float pipe type with indication, switches and transmitter.	As Level transmitter & level switches shall be provided with accumulator, so oil level sight gauges & metallic magnetic float pipe is not required, kindly accept	Kindly refer amendment in this regard

SR. NO.	Volume	Clause no	Clause name	Page No	Description as per Bid Document	Remarks - Query/ Clarification	NHPC REPLY
14	Vol-III B (Particular Technical Specifications (PTS)), Digital Governing system and accessories	3.5.8.2	Construction and safety features	PDF Page: 91 of 640	In this case, all contacts shall be adjustable electrically separate and suitable for 220 V DC operation.	All contacts shall be adjustable electrically separate and suitable for 24 V DC operation, please accept.	Tender provisions are clear in this regard.
15	Vol-III B (Particular Technical Specifications (PTS)), Digital Governing system and accessories	3.5.8.3	Oil pressure piping	PDF Page: 91 of 640	The piping shall be of such size that the maximum oil velocity shall not exceed 3.0 m/sec in the pressure lines and 1.5 m/sec in the return lines.	It is proposed to size the piping as per IEEE 1207, kindly accept.	Kindly adhere to tender specification.
16	Vol-III B (Particular Technical Specifications (PTS)), Digital Governing system and accessories	3.8	Spare Parts	PDF Page: 93 of 640	Nitrogen cylinders- Total number required for One (1) unit	Spare nitrogen cylinders are not required, please accept.	Kindly adhere to tender specification.
17	Vol-III B (Particular Technical Specifications (PTS)), Main Inlet Valve and accessories	4.5.11.4	Oil sump tank	PDF Page: 108 of 640	The sump tank shall be provided with a manhole of 500 mm diameter with a suitable oil resistant gasket for access to the interior of the tank	Practically as per the current industry practice, size of manhole with 500 mm Dia is not possible. Kindly update the clause as sufficient diameter manhole for the maintenance requirement to be provided. It shall be of about 400 mm.	Tender provisions are clear in this regard.
18	Vol-III B (Particular Technical Specifications (PTS)), Main Inlet Valve and accessories	4.5.11.4	Oil sump tank	PDF Page: 108 of 640	Low and high level switches shall be provided for sump tank, suitable for 220 V DC	Low and high level switches shall be provided for sump tank, suitable for 24 V DC, please accept.	Tender provisions are clear in this regard.
19	Vol-III B (Particular Technical Specifications (PTS)), Main Inlet Valve and accessories	4.5.11.4, A)	Control valve oil filtering	PDF Page: 108 of 640	Suitable dual on line oil filter with changeover and clogging indication shall be provided in main inlet valve actuator supply circuit to ensure that impurities as recommended by the manufacturer are avoided.	Suitable dual on line oil filter with changeover and clogging indication shall be provided in main supply circuit after pump discharge to ensure that impurities as recommended by the manufacturer are avoided, please accept.	Tender provisions are clear in this regard.
20	Vol-III B (Particular Technical Specifications (PTS)), Main Inlet Valve and accessories	4.5.11.5	Oil leakage unit	PDF Page: 109 of 640	The leakage oil units, if required, shall be provided for the collection of oil leakages from the servomotors and in the event of maintenance for draining the servomotors; oil pipelines and guide bearing.	Please be noted that all return lines for servomotor shall be directly connected with main HPU tank so oil leakage unit is not required, please accept.	Kindly adhere to tender specification.
21	Vol-III B (Particular Technical Specifications (PTS)), Main Inlet Valve and accessories	4.5.12.1	Capacity	PDF Page: 109 of 640	The size of the accumulator shall be such that it shall be possible to operate the main inlet valve three (3) times (2 “C”+1 “O”) from minimum normal working/operating oil pressure to minimum allowable pressure without the operation of main inlet valve oil pumps and without dry nitrogen admission and shall be designed for a pressure ten(10) percent above the actual maximum system pressure..	We request to accept the accumulator sizing to operate the main inlet valve two (2) times (1 “C”+1 “O”), kindy accept.	Kindly adhere to tender specification.
22	Vol-III B (Particular Technical Specifications (PTS)), Main Inlet Valve and accessories	4.5.12.2	Construction and safety features	PDF Page: 109 of 640	The accumulator shall be constructed from seamless steel conforming to EN 10028-3 P355NL1 or equivalent in accordance with part UW of the ASME Code for Unfired Pressure Vessels, Section VIII, for the maximum working pressure of the system.	Piston accumulator shall be designed and tested in accordance with the pressure equipment directive (PED) - 2014/68/EU. Please accept.	Kindly refer amendment, however, provision in tender specification is clear in this regard

SR. NO.	Volume	Clause no	Clause name	Page No	Description as per Bid Document	Remarks - Query/ Clarification	NHPC REPLY
23	Vol-III B (Particular Technical Specifications (PTS)), Main Inlet Valve and accessories	4.5.12.2	Construction and safety features	PDF Page: 110 of 640	The accumulator shall be equipped with a pressure gauge, a safety relief valve, pressure transducer, and oil-level sight gauge metallic magnetic float pipe type with indication, switches and transmitter.	As Level transmitter & level switches shall be provided with accumulator, so oil level sight gauges & metallic magnetic float pipe is not required, kindly accept	Kindly refer amendment in this regard
24	Vol-III B (Particular Technical Specifications (PTS)), Main Inlet Valve and accessories	4.5.12.2	Construction and safety features	PDF Page: 110 of 640	All transmitters shall be 4 to 20 mA type. Contractor is free to use individual suitable pressure and level switches. In this case, all contacts shall be adjustable electrically separate and suitable for 220 V DC operation.	All contacts shall be adjustable electrically separate and suitable for 24 V DC operation, please accept.	Tender provisions are clear in this regard.
25	Vol-III B (Particular Technical Specifications (PTS)), Electric Overhead Travelling (EOT) Cranes	23.1.2	5 T EOT crane for GIS handling (Single Girder)	PDF Page: 465 of 640	One (1) no. 05 metric tonnes electric overhead travelling bridge crane of span approximately 15.75 m (tentative) complete with electric control panels both pendant and remote radio control, hoist on trolley, brakes, safety devices, platform, ladders, fittings and connections and all necessary accessories	It is proposed to use one (1) 10 tonnes electric overhead travelling bridge crane for GIS handling, kindly accept.	Kindly refer amendment in this regard.
26	Vol-III B (Particular Technical Specifications (PTS)), Electric Overhead Travelling (EOT) Cranes	23.1.3, iv)	Miscellaneous items	PDF Page: 466 of 640	Load testing of cranes at site including load arrangement and all logistics,	Load arrangement for load testing of crane shall be in customer scope of supply, kindly confirm.	Tender provisions are clear in this regard.
27	Vol-III B (Particular Technical Specifications (PTS)), Electric Overhead Travelling (EOT) Cranes	23.5.21.1	Walkways and ladders	PDF Page: 484 of 640	Walkways and ladders	Please be noted that walkway & ladders mentioned under this clause shall be applicable for the walkway structure & ladders in the crane only, same shall be provided by E&M contractor. However ladder required to access the crane from power house service bay/ GIS hall floor shall be provided by Civil /Customer	Tender provisions are clear in this regard.
28	Vol-III B (Particular Technical Specifications (PTS)), Cooling Water system	24.1.1	Cooling water system equipments	PDF Page: 491 of 640	One (1) no. per unit automatic self-cleaning filter along with local control panel instrumentation and associated accessories for labyrinths cooling during synchronous condenser mode water circuit	The filtration requirement for labyrinths cooling during synchronous condenser mode water circuit shall be catered by main fiters, so please review the requirement.	Tender provisions are clear in this regard.
29	Vol-III B (Particular Technical Specifications (PTS)), Cooling Water system	24.2.1 A)	Twin cooling water circuit	PDF Page: 492 of 640	A common make up water tank with automatic self-cleaning fine filters including necessary valves, instrumentation etc. shall be provided for the secondary cooling water circuit by the contractor.	Common makeup water tank shall be in customer scope. Please confirm	Tender provisions are clear in this regard.
30	Vol-III B (Particular Technical Specifications (PTS)), Cooling Water system	24.2.1 A)	Twin cooling water circuit	PDF Page: 492 of 640	The raw water for each unit shall be taken from draft tube by centrifugal pumps having automatic self cleaning filters at suction side and automatic self cleaning filter and heat exchanger at outlet	Please be noted that automatic self cleaning filters shall be provided in pump discharge side, in suction side avaiable pressure in the tail pool shall not be sufficient for the autobackwash process. Additionally if required one duplex basket stariner of suitable rating may be provided in the pump suction line tapped from the tail pool. Kindly update the respective clause accordingly.	Tender provisions are clear in this regard.
31	Vol-III B (Particular Technical Specifications (PTS)), Cooling Water system	24.3.2	Pumps	PDF Page: 495 of 640	Each Shaft seal cooling water pump shall also cater to shaft seal requirement of two units.	Each Shaft seal cooling water pump shall cater to shaft seal requirement of one unit, as it shall be unitized system, please confirm.	Tender provisions are clear in this regard.
32	Vol-III B (Particular Technical Specifications (PTS)), Cooling Water system	24.3.3	Automatic back wash strainer	PDF Page: 495 of 640	The pressure drop across the strainer should be less than approximately 0.2 bar and adequate sensing arrangement shall be provided to sense the pressure drop across the strainer for further integration with plant SCADA system.	0.2 bar pressure drop across strainers will increase the size of filters, kindly accept 0.5 bar pressure drop across strainers.	Tender provisions are clear in this regard.
33	Vol-III B (Particular Technical Specifications (PTS)), Cooling Water system	24.3.7	Heat exchanger	PDF Page: 497 of 640	Gap of minimum 10-12 mm in raw waterside and minimum 4-6 mm in secondary water side shall be taken into consideration for designing wide gap plate type heat exchanger.	The gap between plates shall be as per the heat exchanger design requirement, please confirm.	Tender provisions are clear in this regard.
34	Vol-III B (Particular Technical Specifications (PTS)), Cooling Water system	24.5.8	Valves and piping	PDF Page: 499 of 640	All embedded and exposed piping shall be of seamless of minimum schedule 80. All gravity drain pipes shall be seamless schedule 40	As the design pressure of cooling water system shall be less, so kindly accept schedule 40 for all the pipes.	Tender provisions are clear in this regard.
35	Vol-III B (Particular Technical Specifications (PTS)), Drainage and dewatering system	25.3.1	Drainage and Dewatering system	PDF Page: 512 of 640	The design flow rate during dewatering operation shall be calculated to empty remaining water between penstock and draft tube gate in approximately 4 to 6 hours after gravity drainage.	As a general practice the dewatering time of 6 hours shall be considered between MIV up to draft tube gate, which is inline with CEA guide line, kindly accept.	Tender provisions are clear in this regard.
36	Vol-III B (Particular Technical Specifications (PTS)), Drainage and dewatering system	25.5.3	Valves, Piping and Floor drains	PDF Page: 515 of 640	All embedded and exposed piping shall be of seamless of minimum schedule 80. All gravity drain pipes shall be seamless schedule 40.	As the design pressure of drainage & dewatering system shall be less, so kindly accept schedule 40 for all the pipes.	Tender provisions are clear in this regard.

SR. NO.	Volume	Clause no	Clause name	Page No	Description as per Bid Document	Remarks - Query/ Clarification	NHPC REPLY
37	Vol-III B (Particular Technical Specifications (PTS)), Drainage and dewatering system	25.5.3	Valves, Piping and Floor drains	PDF Page: 516 of 640	Valve body of all type of valves shall be preferably of cast steel except smaller valves (50 mm and lower) for which material shall be stainless steel.	Valve body of all type of valves shall be preferably of cast steel, please accept.	Tender provisions are clear in this regard.
38	Vol-III B (Particular Technical Specifications (PTS)), Heating, Ventilation and air conditioning system (HVAC)	26.1.5	Auxiliary system and miscellaneous items	PDF Page: 523 of 640	Central computerised control panel for HVAC system complete with all wiring, instrumentation and associated accessories etc.	Control panel for HVAC system shall be of hard wire type. Kindly update the clause.	Tender provisions are clear in this regard.
39	Vol-III B (Particular Technical Specifications (PTS)), Heating, Ventilation and air conditioning system (HVAC)	26.5.15	Exhaust Air Fans	PDF Page: 536 of 640	Exhaust air fans shall be adjustable axial flow fans. Axial air fans shall be of the multi blade vane type. The vanes shall be adjustable individually at standstill. The hub of the impeller shall be directly coupled to the motor shaft and its diameter adapted to the motor frame. The impeller shall be statically and dynamically balanced.	For Power house all exhaust fans shall be of "Axial Type" as specified in the respective clause. However it is to be noted that fans to be installed in small area like toilets, pantry room, DG room etc. shall be of propeller type and manufacturing shall be as per OEM standard. Kindly accept.	Kindly refer amended chapter in this regard.
40	Vol-III B (Particular Technical Specifications (PTS)), Compressed air system	28.1.1	Compressed Air Systems	PDF Page: 569 of 640	v) Service air hoses of length 30 m with necessary connectors etc.located in wall mounted service air enclosure as per approved drawings	Hose length shall be of 10 m each for service requirement as per standard industry design practice. However it is confirmed that sufficient no. of portable hose connections shall be made available in view of the pant maintenance requirement	Tender provisions are clear in this regard.
41	Vol-III B (Particular Technical Specifications (PTS)), Compressed air system	28.5.2	Compressors	PDF Page: 573 of 640	Each compressor shall be rotary screw type (Oil flooded type), heavy duty and electric driven complete with automatic lubrication, air intake filter, oil filters, after coolers, water/oil separators, discharge valves, non return valves, automatic moisture trap and other associated accessories.	For synchronous condenser operation, high pressor compressor of reciprocating type is applicable,it is requested to update the requirement.	Tender provisions are clear in this regard.
42	Vol-III B (Particular Technical Specifications (PTS)), Compressed air system	28.8	Spare Parts	PDF Page: 576 of 640	Air dryer complete assembly for Main LP and Blow down Air compressor	Air dryer for Blow down Air compressor is not required, kindly update the requirement.	Kindly refer amendment in this regard
43	Vol-III B (Particular Technical Specifications (PTS)), Fire fighting system	29.5.7	Piping, valves and appurtenances	PDF Page: 588 of 640	Piping, valves and appurtenances	For fire fighting system, the MOC of valves shall be select to meet the system requirement. All valves body shall be of cast steel/ cast iron, internal SS/30% cromium with SS facing, kindly accept	Tender provisions are clear in this regard.
44	Vol-III B (Particular Technical Specifications (PTS)), Elevator	32.5.2.2	Car enclosure	PDF Page: 623 of 640	vi) Emergency Exit on the Car top	Emergency exit on car top is more risky and not recommended by elevator supplier. To access the car top from cabin is itself at challenge for the person to get him self out from the car and moreover after reaching to the car top again person cannot further connect with any of the floor as there shall not be any access ladder in the elevator shaft. Kindly review the requirement and update the respective section accordingly.	Tender provisions are clear in this regard.

NHPC LIMITED

Lot-III: Electro-Mechanical works of (2X120 MW) Uri-I Stage-II HE Project
NIT No.- 2026_NHPC_906114_1 & Tender Reference No.:NH/Conts(EnM)-III/Uri-I Stage-II/ENM/2026/01, dated-29.05.2026
INFORMATIVE REPLIES-TECHNICAL-PART C

S. No.	Query Sr. No.	Volume / Clause No. & Name / Page No.	Description as per Bid Document	Bidder's Query/ Clarification	NHPC Comment
		Voith Hydro Pvt Ltd			
1	1	Volume-IIA (GCC), 23.3, Test and Inspection, PDF Page: 204 of 307	Whenever the Contractor is ready to carry out any such test and/or inspection, the Contractor shall give a (three) 3weeks advance notice of such test and/or inspection and of the place and time thereof to the Engineer In-Charge.	Requested to you kindly allow the 2 weeks for advance notice for witness the inspection stage.	Bid Condition shall prevail.Bidder may be requested to adhere bid condition.
2	2	Volume- III D Quality Test specification (QTS) Clauses, 1.2.6.2, Examination of Casting, PDF Page: 6 of 304	The turbine runner casting shall be given complete non-destructive examination including radiographic examination of the most critical areas.	Ultrasonic test is giving the same results efficently as Radiographic testing (RT) on the castings & globally used to detect internal discontinuities as per quality sheet. RT is not preferred due to health hazards and UT in lieu of RT is globally accepted by other customer hence request to please accept here also.	Bid Condition shall prevail. Bidder may be requested to adhere bid condition.
3	3	Volume- III D Quality Test specification (QTS) Clauses, 1.3.4.1, Parts Exposed to Hydraulic Pressure, PDF Page: 9 of 304	The hydraulic test pressure shall be l.5 times the maximum operating pressure (except for spiral distributor) and shall be maintained for a period of eight hours or longer if required by the applicable standards.	Please note that Hydraulic test pressure detail Test pressure, test duration shall be according to approved drawing / datasheet/applicable standard.	**Refer Amendment No. 1**
4	4	Volume- III D (QTS) Turbine & Accessories, 2.3.2 C, Heating run test, PDF Page: 18 of 304	Heat run test shall be undertaken at full load if load rejection at 75% of rated power has been successfully performed.	Please note that Heat run test shall be undertaken at full load after load rejection at 100% of rated power. Kindly consider the same.	**Refer Amendment No. 1**
5	7	Volume- III D (QTS) Main Inlet Valve-Spherical Valve and Accessories, 4.1, Type Test, PDF Page: 22 of 304	The contractor is required to carry out all type tests as per relevant National/ International Standards on one apparatus of each type of similar rating and shall submit the reports to the Employer. The type test may not be mandatory if similar equipment has been type tested and test certificate (s) for relevant tests are accepted by the Employer. Moreover Applicability of type test reports shall be governed as per the prevailing CEA norms. Type test reports of the following items shall be submitted for acceptance with adequate details/ drawings to establish equivalence with offered type: □ Bye pass valve and air release valve □ Servomotor □ Pump and motor for oil pressure unit □ Other items felt necessary during detail engineering.	Please note that Type test report to be provide for Motor only for other Items(Valves,Servomotor,Pumps) Type Test is not applicable as per relevant standard being a mechanical items.However routine test report will be submitted as per applicable standard. Kindly accept the same.	Bid Condition shall prevail. Bidder may be requested to adhere bid condition.
6	8	Volume- III D (QTS) Generator, 5.3, Field Tests, PDF Page: 24 of 304	Following tests in operation without any harmful damage to the machine: □ Guide bearings and the thrust bearing to be able to operate for 15 minutes at rated conditions without any water cooling auxiliaries,	This is confirmed that the Machine is designed for meeting the contract requirement. However, it is not recommended to conduct this test in normal operational condition. So, VH requests for waiver to perform this test on the machine to avoid any harm to the machine.	Bid Condition shall prevail.Bidder may be requested to adhere bid condition.

NHPC LIMITED

Lot-III: Electro-Mechanical works of (2X120 MW) Uri-I Stage-II HE Project

NIT No.- 2026_NHPC_906114_1 & Tender Reference No.:NH/Conts(EnM)-III/Uri-I Stage-II/ENM/2026/01, dated-29.05.2026

Reply of Queries pursuant to Pre-bid meeting held on 29.06.2026

For intimation to all Bidders

S. No.	Query Sr. No.	Volume / Clause No. & Name / Page No.	Description as per Bid Document	Bidder's Query/ Clarification	NHPC Comment
7	9	Volume- III D (QTS) Generator, 5.3, Commissioning tests & Field Test, PDF Page: 25 of 304	High voltage withstand test on individual windings in accordance with IEC 60034-1,	Please note that High voltage withstand test on individual winding Bar to be performed at manufacturer works so no need and not recommended to repeat High Voltage test however assembled stator winding HV test also performed as per required contract specification, so High voltage withstand test on individual winding not required. kindly accept the same.	Bid Condition shall prevail.Bidder may be requested to adhere bid condition.
8	10	Volume- III D (QTS) Generator, 5.3, Field Tests, PDF Page: 26 of 304	The following tests shall be performed on one of the generator selected by the Engineer-in-charge: □ Determination of the values for Xd, X'd, X"d, and Xq shall be as per PTS clause no-5.3.3 □ Determination of the following constants: T'do, T'd, T"d and Ta shall be as per PTS clause no-5.3.3, □ Measurement of the individual losses and determination of the efficiency in accordance with IEC 60034-2 in the presence of the Turbine Contractor.	Please note that Determination of these characteristics parameters are calculated in proven calculation tools and values in data sheet can be used in different protection parameter calculations. And tests for determination of said values are not required. Kindly accept the same.	Bid Condition shall prevail.Bidder may be requested to adhere bid condition.
9	11	Volume- III D (QTS) Cooling water system, 24.1, Type Test, PDF Page: 59 of 304	Type Test The contractor is required to carry out all type tests as per relevant National/ International Standards on one apparatus of each type of similar rating and shall submit the reports to the Employer. The type test may not be mandatory if similar equipment has been type tested and test certificate (s) for relevant tests are accepted by the Employer. Moreover Applicability of type test reports shall be governed as per the prevailing CEA norms. Type test reports of the following items shall be submitted for acceptance with adequate details/ drawings to establish equivalence with offered type: □ Pump and motors. □ Other items felt necessary during detail engineering	Please note that Type test report to be provide for Motor only for other Items(Pumps) Type Test is not applicable as per relevant standard being a mechanical items. However routine test report will be submitted as per applicable standard. Kindly accept the same.	Bid Condition shall prevail. Bidder may be requested to adhere bid condition.
10	12	Volume- III D (QTS) Cooling water system, 24.3, Field Test, PDF Page: 59 of 304	Operational Test on Pump-Motor Assembly for measurement of Head, Rate of Flow, Speed & Power Input.	Please not that Efficiency test no need at site because it is not envisaged at site same to be performed at manufacturer works . And Functional test / Run test of Pumps with complete setup to performed at site which will be part of Field Quality Plan. Kindly accept the same.	**Refer Amendment No. 1**

NHPC LIMITED

Lot-III: Electro-Mechanical works of (2X120 MW) Uri-I Stage-II HE Project

NIT No.- 2026_NHPC_906114_1 & Tender Reference No.:NH/Conts(EnM)-III/Uri-I Stage-II/ENM/2026/01, dated-29.05.2026

Reply of Queries pursuant to Pre-bid meeting held on 29.06.2026

For intimation to all Bidders

S. No.	Query Sr. No.	Volume / Clause No. & Name / Page No.	Description as per Bid Document	Bidder's Query/ Clarification	NHPC Comment
11	13	Volume- III D (QTS) Drainage & Dewatering system, 25.1, Type Test of Drainage & Dewatering System, PDF Page: 61 of 304	25.1 Type Test The contractor is required to carry out all type tests as per relevant National/ International Standards on one apparatus of each type of similar rating and shall submit the reports to the Employer. The type test may not be mandatory if similar equipment has been type tested and test certificate (s) for relevant tests are accepted by the Employer. Moreover Applicability of type test reports shall be governed as per the prevailing CEA norms.Type test reports of the following items shall be submitted for acceptance with adequate details/ drawings to establish equivalence with offered type: □ Submersible pumps and motors. □ Power cable and control cable for submersible pump. □ Valves and other items felt necessary during detail engineering.	Please note that Type test report to be provide for Motor only for other Items(Valves,Pumps) Type Test is not applicable as per relevant standard being a mechanical items. However routine test report will be submitted as per applicable standard. Kindly accept the same.	Bid Condition shall prevail. Bidder may be requested to adhere bid condition.
12	14	Volume- III D (QTS) Drainage & Dewatering system, 25.3, Field Test, PDF Page: 61 of 304	Operational Test on Pump-Motor Assembly for measurement of Head, Rate of Flow, Speed & Power Input.	Please not that Efficiency test no need at site because it is not envisaged at site same to be performed at manufacturer works . And Functional test / Run test of Pumps with complete setup to performed at site which will be part of Field Quality Plan. Kindly accept the same.	**Refer Amendment No. 1**
13	15	Volume- III D Model Quality assurance plan (MQAP), Note - f of all MQAP, Model QAP Francis Turbine & Accessories -Stay Ring & Spiral Casing	f.Material testing shall be conducted from Govt. Lab, NABL Lab or NABL accredited lab having valid Scope of accreditation of all specified tests mentioned in approved QAP	Please note that in case of Plate,Pipe Material Test to be conduct in NABL Lab if Mill Test certificate is not available. Kindly accept the same.	Bid Condition shall prevail.Bidder may be requested to adhere bid condition.
14	16	Volume- III D Model Quality assurance plan (MQAP) Francis Turbine & Accessories, 3.8, Turbine Shaft, PDF Page: 90 of 304	Proof Assembly of Turbine shaft with Runner to check the fitment & alignment (As applicable)- For 1st unit #	Please note that this is a Big size machine where the size of Runner and Shaft are Huge and weight of assembly will be too heavy which is not feasible to handle together in workshop and also not recommended from safety point of view. Secondly, the drilling in shaft & Runner is done using the drilling template . This is the globally acceptable manufacturing technique to ensure interchangeability. This is also the Voith standard proven design in all projects. So trail shop assembly of Turbine Shaft with Runner is not required. Kindly accept the same.	Bid Condition shall prevail.Bidder may be requested to adhere bid condition.

NHPC LIMITED

Lot-III: Electro-Mechanical works of (2X120 MW) Uri-I Stage-II HE Project

NIT No.- 2026_NHPC_906114_1 & Tender Reference No.:NH/Conts(EnM)-III/Uri-I Stage-II/ENM/2026/01, dated-29.05.2026

Reply of Queries pursuant to Pre-bid meeting held on 29.06.2026

For intimation to all Bidders

S. No.	Query Sr. No.	Volume / Clause No. & Name / Page No.	Description as per Bid Document	Bidder's Query/ Clarification	NHPC Comment
15	17	Volume- III D Model Quality assurance plan (MQAP) Francis Turbine & Accessories, 5.2, Over Speed Control Device with Turbine Shaft, PDF Page: 94 of 304	Performance Test	This Test is not envisaged at shop, same to be performed at site, kindly accept the same.	Performance test of Over Speed Control Device for Turbine Shaft falls under TC category. Hence, combined testing of Over Speed Control Device with Turbine Shaft to be done at site.
16	18	Volume- III D Model Quality assurance plan (MQAP) Generator & Accessories, A . ii), Generator -Stator Punching, PDF Page: 111 of 304	Stacking factor,Specific Total Loss, Magnetic Polarization	Please note that these test are raw material stage same CHP is not envisaged so requested to you kindly accept based on TC. This is standard practice which already followed and accepted by NHPC in past executed projects.	**Refer Amendment No-1**
17	19	Volume- III D Model Quality assurance plan (MQAP) Generator & Accessories, B . i) & ii), Generator- Unwound Stator, PDF Page: 112 of 304	Core Assembly i) Dimension Check (Check of core for waviness, core dia,packet size and Height after assembly) ii) Core Loss Test and Hot Spot detection	Please note that these test to be conduct at site after assembly and so same to be covered in Field Quality Plan during detail Engg. Kindly accept the same.	**Refer Amendment No-1**
18	20	Volume- III D Model Quality assurance plan (MQAP) Generator & Accessories, B. iii), Stator Winding Bar, PDF Page: 113 of 304	B. iii) Break Down Voltage test at Room Temperature & related temperature	Please note followings: -Insulated strand (component of final product stator bar) is made of Copper and Insulation on it. OEM's use their own proven qualified insulation technology for strands as well as final product. The insulation materials in component levels are as per OEM practices and is proven and qualified. The insulation on the strand is also qualified as per OEM practice which meets the final product insulation requirements. -Micalastic® Insulation technology is used by VOITH and Siemens globally including in Indian projects viz. Baglihar (Stage-1 & Stage-2), Karcham Wangtoo, Omkareshwar, Sainj and others which are running successfully. -In the above insulation technology, the strand insulation breakdown voltage test is performed at room temperature and never tested and not required at higher temperatures. With above, VOITH request to accept the tests on insulated strands at room temp. inline with its standard practice.	**Refer Amendment No-1**

NHPC LIMITED

Lot-III: Electro-Mechanical works of (2X120 MW) Uri-I Stage-II HE Project

NIT No.- 2026_NHPC_906114_1 & Tender Reference No.:NH/Conts(EnM)-III/Uri-I Stage-II/ENM/2026/01, dated-29.05.2026

Reply of Queries pursuant to Pre-bid meeting held on 29.06.2026

For intimation to all Bidders

S. No.	Query Sr. No.	Volume / Clause No. & Name / Page No.	Description as per Bid Document	Bidder's Query/ Clarification	NHPC Comment
19	21	Volume- III D Model Quality assurance plan (MQAP) Generator & Accessories, B, Stator Winding Bar, PDF Page: 114 of 304	B Mica Tape iii) Resin Content (for Resin Rich only) iv)Voltality Content vii)Resin Flow Rate	As per BID Documents as Volume -III B (PTS) Clause 5.5.5.3 of Stator Winding page no 5 of 9, Stator Bars shall be manufactured by VPI technology. For VPI bars, these tests are not applicable.	**Refer Amendment No-1**
20	22	Volume- III D Model Quality assurance plan (MQAP) Generator & Accessories, 3.ii), Stator Winding Bar, PDF Page: 114 of 304	3) Final Inspection - Stator Winding Bar ii) Impulse Voltage withstand Test	Please note that Impulse Voltage Test:This is type test of insulation process, So Test certificate of earlier executed test is acceptable. Kindly confirm the same.	Bid Condition shall prevail.Bidder may be requested to adhere bid condition.
21	24	Volume- III D Model Quality assurance plan (MQAP) Generator & Accessories, 3.iii), Stator Winding Bar, PDF Page: 114 of 304	3) iii) IR after HV Test	Please note that IR test of individual bar is not feasible at shop floor and also not in VOITH standard guidelines however IR test is conducted at site and same will be part of Field Quality plan. Kindly accept the same.	**Refer Amendment No-1**
22	25	Volume- III D Model Quality assurance plan (MQAP) Generator & Accessories, A.iii), Rotor rim assembly, PDF Page: 116 of 304	iii) Electrical Properties	Please note that for High Tensile Magnetic Steel Sheet magnetic properties are applicable as per international standards and will be provided. Kindly confirm the same.	Bid Condition shall prevail.Bidder may be requested to adhere bid condition.
23	26	Volume- III D Model Quality assurance plan (MQAP) Generator & Accessories, B .iii), Rotor rim assembly, PDF Page: 116 of 304	Trail Assembely of Rotor Rim Punching (inner & outer diameter verification, slot width & depth measurement, waveness, packet size & slots checking with key bar)	Please note that for Trail Assembely of Rotor Rim Punching Pre stacking test to be done at shop floor for 50 mm approx. Height for inner & outer diameter verification, slot width & depth measurement, waviness, packet size & slots checking with sample key bar for 01 Unit to prove laser cutting programming. Complete Trail shop assembly of Rotor Rim to be done at site which to be part of Field Quality Plane. Kindly accept the same.	Bid Condition shall prevail.Bidder may be requested to adhere bid condition.
24	27	Volume- III D Model Quality assurance plan (MQAP) Generator & Accessories, A.iii), Pole Assembly, PDF Page: 117 of 304	iii) Electrical Properties	Please note that Electrical properties are applicable for Pole coils and Damper Bars. Kindly confirm the same.	Bid Condition shall prevail.Bidder may be requested to adhere bid condition.
25	28	Volume- III D Model Quality assurance plan (MQAP) Generator & Accessories, B i), Pole Assembly, PDF Page: 117 of 304	Visual Finish & Dimensional check under CHP	Please note that this is stage inspection so CHP is not envisaged. Kindly accept based on internal TC.	Bid Condition shall prevail.Bidder may be requested to adhere bid condition.
26	29	Volume- III D Model Quality assurance plan (MQAP) Generator & Accessories, B. iii), Pole Assembly, PDF Page: 117 of 304	Inter Turn Test (HF induced voltage test)	Alternate of Inter Turn Test (HF induced voltage test) is considered as Surge Test.same will performed. Kindly accept the same.	Bid Condition shall prevail.Bidder may be requested to adhere bid condition.

NHPC LIMITED

Lot-III: Electro-Mechanical works of (2X120 MW) Uri-I Stage-II HE Project

NIT No.- 2026_NHPC_906114_1 & Tender Reference No.:NH/Conts(EnM)-III/Uri-I Stage-II/ENM/2026/01, dated-29.05.2026

Reply of Queries pursuant to Pre-bid meeting held on 29.06.2026

For intimation to all Bidders

S. No.	Query Sr. No.	Volume / Clause No. & Name / Page No.	Description as per Bid Document	Bidder's Query/ Clarification	NHPC Comment
27	30	Volume- III D Model Quality assurance plan (MQAP) Generator & Accessories, B . v) , Pole Assembly, PDF Page: 117 of 304	B-v) Milivolt Drop Test	Please note that Milivolt Drop test is conducted when all poles are connected in the wound stator at site.Milivolt Drop test is not feasible to conduct at shop.	Bid Condition shall prevail.Bidder may be requested to adhere bid condition.
28	31	Volume- III D Model Quality assurance plan (MQAP) Generator & Accessories, A.iii) , B.iii), Shaft (Top & bottom), PDF Page: 119 of 304	Raw Material - Mechanical Properties In process inspection -Mechanical Properties after Heat Treatment-axial, radial, tangential	Please note that Mechanical Testing to be performed after Heat treatment one time only. and applicable material standard defines the type of tests and quantum of tests. It is requested to follow the material standard requirements as a standard practice.	Bid Condition shall prevail.Bidder may be requested to adhere bid condition.
29	32	Volume- III D Model Quality assurance plan (MQAP) Generator & Accessories, B.i), Brake & Jacking, PDF Page: 121 of 304	Pressure test on Air & Oil Pipes	Please note that we understand that Loose Pipes to be supplied at site Pipes are bough out Items and will be fitted at site according to system layout after erection & complete pipe line Air & Oil to be Pressure /Leakage Test same to be under CHP which to be part of Field Quality Plan. Individual Loose Pipes pressure test is not envisaged. Those tested in Pipes mills for that MTC to be provide the same. kindly accept the same.	Bid Condition shall prevail.Bidder may be requested to adhere bid condition.
30	33	Volume- III D Model Quality assurance plan (MQAP) Generator & Accessories, C.iii), Brake & Jacking, PDF Page: 121 of 304	Brake & Jack Control Panel - iii) IR & HV Test	Please note HV & IR test is not applicable for Brake & Jack Control Panel. Kindly accept the same.	Bid Condition shall prevail.Bidder may be requested to adhere bid condition.
31	34	Volume- III D Model Quality assurance plan (MQAP) Generator & Accessories, B. vii), Thrust Bearing, PDF Page: 123 of 304	vii) Runout Check of Shaft with Thrust Collar Assembly	Please note that thrust collar is fitted with shaft by shrink fitting process which is only done at site after putting the shaft in position. So this test is not applicable at shop. Combined run out is checked at site as a regular practice.	Bid Condition shall prevail.Bidder may be requested to adhere bid condition.
32	35	Volume- III D Model Quality assurance plan (MQAP) Generator & Accessories, B. vii), Thrust Bearing, PDF Page: 123 of 304	TB Disc iv) Trial assembly of TB Components	Please note that Trial Shop assembly of TB Bearing to be done in shop without TB Pads. Same to be performed at site. Please accept the same.	Bid Condition shall prevail.Bidder may be requested to adhere bid condition.
33	36	Volume- III D Model Quality assurance plan (MQAP)Generator & Accessories, B. iii), Guide Bearing (Upper & Lower) Pads, PDF Page: 124 of 304	Trial assembly of complete Bearing	Please not that Trial assembly of complete bearing is not envisaged in workshop because some items like Internal Cooler,Thrust & Guide Pads are manufactured at different location and deferent time scheduled so Trail assembly of Upper & Lower Bearings will be done in works without Coolers,Guide & Thrust Pad & other small boughout items as instruments. Kindly confirm.	Bid Condition shall prevail.Bidder may be requested to adhere bid condition.
34	37	Volume- III D Model Quality assurance plan (MQAP) Generator & Accessories, B.iv), Air & Oil Coolers, PDF Page: 124 of 304	Trial assembly of oil coolers (or dummy frame) in Upper and Lower Brackets	Please note that assembly of Oil collers is flexible / adjustable type in the bearing brackets which can easily been done at site. This is general standard practice Voith follow the same in all Projects. So no need trial assembly in workshop. Kindly accept the same.	**Refer Amendment No-1**

NHPC LIMITED

Lot-III: Electro-Mechanical works of (2X120 MW) Uri-I Stage-II HE Project

NIT No.- 2026_NHPC_906114_1 & Tender Reference No.:NH/Conts(EnM)-III/Uri-I Stage-II/ENM/2026/01, dated-29.05.2026

Reply of Queries pursuant to Pre-bid meeting held on 29.06.2026

For intimation to all Bidders

S. No.	Query Sr. No.	Volume / Clause No. & Name / Page No.	Description as per Bid Document	Bidder's Query/ Clarification	NHPC Comment
35	38	Volume- III D Model Quality assurance plan (MQAP) EOT Crane, 3.4 c), EOT Crane, PDF Page: 255 of 304	Operational/functional test - CT travel test at 125% of rated load	Please note that CT travel test at 125% of rated load is not envisaged at manufacturer works. same to be done at site. Kindly accept the same.	Bid Condition shall prevail.Bidder may be requested to adhere bid condition.
36	39	Volume- III D Model Quality assurance plan (MQAP) Heat Ventilation and Air conditioning (HVAC) System, 6 . b), Heating, Ventilation and Air Conditioning (HVAC) System, PDF Page: 270 of 304	Assembly Test of Chillar unit - Performance Test at different loading condition - Capacity (TR) & Power Consumption	Please note that at supplier works only Visual & Diemsnion check will performed and Performance Test at different loading condition is not envisaged at supplier works same to be perfomed at site because at supplier works site simulation condition is not avilable. kindly accept the same.	**Refer Amendment No. 1**
37	40	Volume- III D Model Quality assurance plan (MQAP) Mechanical Workshop, Final Inspection, MECHANICAL WORKSHOP, PDF Page: 288 & 298 of 304	CHP for Final Stage for Mechanical Workshop Equipments	Please note that these are standard boughout items and no need for CHP. We requetsed that same shall be accepted based on internal Inspection report against CHP. Please accept the same.	**Refer Amendment No. 1**
38	41	Volume- III D Model Quality assurance plan (MQAP) Elevator, 2.2, Service Elevator, PDF Page: 302 of 304	2.2 Satisfactory Operation of each controller, switch, contactor,starter, retiring cam,relay & other control devices and the correct operation of all limit switches under the most unfavorable conditions through simulation process.	2.2- Please note that the Elevator is completely assembled and operation checked at site. At shop floor the operation of the controller & other parts are done to simulation process as a standard practice.	Bid Condition shall prevail.Bidder may be requested to adhere bid condition.
39	42	Volume- III D (QTS)- Bus Duct, 7.1, Type Tests, PDF Page: 29 of 304	Temperature Rise Test Short Time Current Test Impulse Voltage Tes	VHN propses to accept slightly lower and higher rating of type test reports conducted earlier on bus duct for review. Kindly accept.	Bid Condition shall prevail.Bidder may be requested to adhere bid condition.
40	43	Volume- III D (QTS) Generator Transformer, 8.1, Type Tests, PDF Page: 30 of 304	Temperature rise test Measurement of Power taken by liquid pump motors Determination of Sound leve	VHN propse to accept slightly lower and higher rating of type test reports conducted earlier on bus duct for review. Kindly accept.	Bid Condition shall prevail.Bidder may be requested to adhere bid condition.
41	44	VOLUME – III D: Bus Reactor, 9.1, Type Tests, PDF Page: 32 of 304	Temperature rise test Measurement of Vibration Measurement of acoustic sound level Dielectric Test Measurement of power consumption of oil pump	VHN propse to accept slightly lower and higher rating of type test reports conducted earlier on bus duct for review. Kindly accept.	Bid Condition shall prevail.Bidder may be requested to adhere bid condition.
42	45	VOLUME – III D: DC Systems, 13.1, Type Tests, Pdf Page 39 of 304	AC & DC distribution boards	Kindly note that AC & DC Distribution consists only MCBs . Therefore, VHN will provide applicable IP certificates for review. Kindly accept.	Bid Condition shall prevail.Bidder may be requested to adhere bid condition.

NHPC LIMITED

Lot-III: Electro-Mechanical works of (2X120 MW) Uri-I Stage-II HE Project

NIT No.- 2026_NHPC_906114_1 & Tender Reference No.:NH/Conts(EnM)-III/Uri-I Stage-II/ENM/2026/01, dated-29.05.2026

Reply of Queries pursuant to Pre-bid meeting held on 29.06.2026

For intimation to all Bidders

S. No.	Query Sr. No.	Volume / Clause No. & Name / Page No.	Description as per Bid Document	Bidder's Query/ Clarification	NHPC Comment
43	46	Volume- III D Model Quality assurance plan (MQAP) Static Excitation system, A.1, Bought Out items, Pdf Page 129 of 306	Thyrister, Transistor, PCB, Zenor Diode, Heat Sink, Filter Surge Suppression, Device etc	Kindly note all these components are integral part of Converter system/ Thyristor bridge, Therefore,Test certificate of Converter system/ Thyristor bridge system shall be provided for review.	Bid Condition shall prevail.Bidder may be requested to adhere bid condition.
44	47	Volume- III D Model Quality assurance plan (MQAP) Static Excitation system, B, Monitoring & Protection, Pdf Page 130 of 304	Monitoring & Protection b) Thyristor Failure Detection c) DC Short Circuit Test e) Transient Over Voltage due to lighting or Switching Surges	TC / Declartion of confirmity for the device and SICROBAR shall be provided.	Bid Condition shall prevail.Bidder may be requested to adhere bid condition.
45	48	Volume- III D Model Quality assurance plan (MQAP) Static Excitation system, C.9, Final Inspection of Excitation System, Pdf Page 131 of 304	Functional Check of Discharge Ckt. and Field Over voltage Protection	Kindly note, It is not fesible to simulate. Circuit will be verified in accordance with Circuit diagram	Bid Condition shall prevail.Bidder may be requested to adhere bid condition.
46	49	Volume- III D Model Quality assurance plan (MQAP) Static Excitation system, C. 12, Final Inspection of Excitation System, Pdf Page 131 of 304	Nominal Exciter response Test	Only calculation shall be provided	Bid Condition shall prevail.Bidder may be requested to adhere bid condition.
47	50	Volume- III D Model Quality assurance plan (MQAP) Static Excitation system, C-13, Final Inspection of Excitation System, Pdf Page 131 of 304	Positive & Negative Ceiling Voltage & Current Test	Positive & Negative Ceiling Current test is not feasible in factory.Same can be demonstrated at site on actual machine.	Bid Condition shall prevail.Bidder may be requested to adhere bid condition.
48	51	Volume- III D Model Quality assurance plan (MQAP) Static Excitation system, C-15(c), Final Inspection of Excitation System, Pdf Page 131 of 304	c) Rectifier Leakage Test	Only Test certificate shall be shared for review.	Bid Condition shall prevail.Bidder may be requested to adhere bid condition.
49	52	Volume- III D Model Quality assurance plan (MQAP) Static Excitation system, C-15(f), Final Inspection of Excitation System, Pdf Page 132 of 304	Polarity and Phase Relationship	This test is not applicable	Bid Condition shall prevail.Bidder may be requested to adhere bid condition.

NHPC LIMITED

Lot-III: Electro-Mechanical works of (2X120 MW) Uri-I Stage-II HE Project

NIT No.- 2026_NHPC_906114_1 & Tender Reference No.:NH/Conts(EnM)-III/Uri-I Stage-II/ENM/2026/01, dated-29.05.2026

Reply of Queries pursuant to Pre-bid meeting held on 29.06.2026

For intimation to all Bidders

S. No.	Query Sr. No.	Volume / Clause No. & Name / Page No.	Description as per Bid Document	Bidder's Query/ Clarification	NHPC Comment
50	53	Volume- III D Model Quality assurance plan (MQAP) Static Excitation system, C-15(g), Final Inspection of Excitation System, Pdf Page 132 of 304	Range & Stability of Rectifier Control	This test is feasible at Site.	Bid Condition shall prevail.Bidder may be requested to adhere bid condition.
51	54	Volume- III D Model Quality assurance plan (MQAP) Static Excitation system, C-17, Final Inspection of Excitation System, Pdf Page 132 of 304	Heat Run Test on Thyristor Bridge	We propose to accept equivalent type test report for review.	Bid Condition shall prevail.Bidder may be requested to adhere bid condition.
52	55	Volume- III D Model Quality assurance plan (MQAP) Excitation tranformer (Dry type), A.4, Raw Material, Pdf Page 134 of 304	Fibre glas sheet / Insulation Barrier	COC shall be provided. Kindly accept.	Bid Condition shall prevail.Bidder may be requested to adhere bid condition.
53	56	Volume- III D Model Quality assurance plan (MQAP) Excitation tranformer (Dry type), B.4, Raw Material, Pdf Page 135 of 304	PTC Thermistor with Alarm and Trip Device	This is not applicable.	Bid Condition shall prevail.Bidder may be requested to adhere bid condition.
54	57	Volume- III D Model Quality assurance plan (MQAP) Excitation tranformer (Dry type), B.5, Raw Material, Pdf Page 135 of 304	Off Circuit Tap Changer: a) Routtine test	Please note that this will be small copper link for which no supplier provides / conduct routine test. Hence, it is not feasible to provide TC. Kindly accept.	**Refer Amendment No-1**
55	58	Volume- III D Model Quality assurance plan (MQAP) Excitation tranformer (Dry type), C. 3 (d), Inprocess Inspection, Pdf Page 136 of 304	In-Process Capacitance before and after Clamping	This test is not applicable.	Bid Condition shall prevail.Bidder may be requested to adhere bid condition.
56	59	Volume- III D Model Quality assurance plan (MQAP) Excitation tranformer (Dry type), C1 (a, b), Final Inspection of Transformer, Pdf Page 137 of 304	a) Temperature Rise Test b) Full wave Lightning Impulse Test(LI)	We propose to accept equivalent type test report for review.	Bid Condition shall prevail.Bidder may be requested to adhere bid condition.
57	60	Volume- III D Model Quality assurance plan (MQAP) Excitation tranformer (Dry type), C3(c,d), Final Inspection of Transformer, Pdf Page 137 of 304	Determination of Sound Level Deterination of Transient voltage Transfer Characteristics	We propose to accept equivalent type test report for review.	Bid Condition shall prevail.Bidder may be requested to adhere bid condition.
58	61	Volume- III D Model Quality assurance plan (MQAP) Bus Duct, A.1.1(d), Aluminium for Enclosure, Pdf Page 139 of 304	A-1.1 Aluminium for Enclosure d) Conductivity	This test is not applicable on bus duct enclosure.	Bid Condition shall prevail.Bidder may be requested to adhere bid condition.

NHPC LIMITED

Lot-III: Electro-Mechanical works of (2X120 MW) Uri-I Stage-II HE Project

NIT No.- 2026_NHPC_906114_1 & Tender Reference No.:NH/Conts(EnM)-III/Uri-I Stage-II/ENM/2026/01, dated-29.05.2026

Reply of Queries pursuant to Pre-bid meeting held on 29.06.2026

For intimation to all Bidders

S. No.	Query Sr. No.	Volume / Clause No. & Name / Page No.	Description as per Bid Document	Bidder's Query/ Clarification	NHPC Comment
59	62	Volume- III D Model Quality assurance plan (MQAP) Bus Duct, A. 1.3(d, e), Epoxy Insulator, Pdf Page 139 of 304	d) Bending Resistance Test e) Thermal Shock test	These test are not applicable. Kindly accept.	Bid Condition shall prevail.Bidder may be requested to adhere bid condition.
60	63	Volume- III D Model Quality assurance plan (MQAP) Bus Duct, 3. I (3.1- 3.3), Type Test, Pdf Page 141 of 304	Temperature Rise Test Short Time Current Test Impulse Voltage Test	VHN propose to accept equivalent/ higher rating type test report for review.Kindly accept.	Bid Condition shall prevail.Bidder may be requested to adhere bid condition.
61	64	Volume- III D Model Quality assurance plan (MQAP) Bus Duct, 3. II (3.8), Routine Test, Pdf Page 141 of 304	Mili Volt Drop Test	Kindly note that as per IS: 8084, Milli-Volt drop test is not a part of routine test. Therefore, Same shall be performered on any one sample. Kindly accept.	Bid Condition shall prevail.Bidder may be requested to adhere bid condition.
62	65	Volume- III D Model Quality assurance plan (MQAP) Bus Duct, B.2.3, Current Transformer, Pdf Page 143 of 304	Type Test (Impulse & Temp. Rise Test)	Kindly note that as per IEC 61869-1, Table-2, Lighting Impulse Test is applicable for equipment intended for use of system with rated volatge above 3.6 kV.	Bid Condition shall prevail.Bidder may be requested to adhere bid condition.
63	66	Volume- III D Model Quality assurance plan (MQAP) GSU Transformer, 1.3 (a, b), Air leakage Test on Tank & Conservator, Pdf Page 147 of 304	Air Leakage Test on Transformer and Conservator a) Leak proofness test for Tank and conservator for 35 KN/ Sq. mm Pressure b) Vacuum withstand test for one Hour and permanent deflection measurement of flat plate.	Please note that as per CBIP manual of Transformer, this is a design test. Therefore, Test will be applicable on only one tank / design. Kindly accept.	Bid Condition shall prevail.Bidder may be requested to adhere bid condition.
64	67	Volume- III D Model Quality assurance plan (MQAP) GSU Transformer, 4.3, Insulating Oil, Pdf Page 148 of 304	Insulating Oil	We propose to accept manufacture's certificate in place of conducting the test.	Bid Condition shall prevail.Bidder may be requested to adhere bid condition.
65	68	Volume- III D Model Quality assurance plan (MQAP) GSU Transformer, 6.1(a-d), Core & Coil assembly(CCA), Pdf Page 150 of 304	Core & Coil assembly(CCA) -(a-d)	We propose to accept Internal report in place of Witnessing the test.	Bid Condition shall prevail.Bidder may be requested to adhere bid condition.
66	69	Volume- III D Model Quality assurance plan (MQAP) GSU Transformer, 8.B (a & b), Type Test, Pdf Page 154 of 304	Type Test: a) Temperature Rise Test b) Determination of Sound level	VHN proposed to accept similar / higher rating Type test reports for review. Kindly accept.	Bid Condition shall prevail.Bidder may be requested to adhere bid condition.
67	70	Volume- III D Model Quality assurance plan (MQAP) GSU Transformer, 8.C (a-g), Special Test, Pdf Page 154 of 304	Special Tests:	We propose to accept similar / higher rating reports for review in place of witnessing the test. Kindly accept.	Bid Condition shall prevail.Bidder may be requested to adhere bid condition.
68	71	Volume- III D Model Quality assurance plan (MQAP) GSU Transformer, 8.C (h), Special Test, Pdf Page 154 of 304	Routine & Functional Test of Nitrogen Injection Fire Protection System (NIFPS)	Routine test / Functional test of Nitrogen Injection Fire Protection System is not feasible at works due to works limitation . Functional test will be demonstaed at site during commissioning. Kindly accept.	Bid Condition shall prevail.Bidder may be requested to adhere bid condition.
69	72	Volume- III D Model Quality assurance plan (MQAP) GSU Transformer, 8.C (j), Special Test, Pdf Page 154 of 304	Functional check of PRD	Kindly note that PRD will be Pressure tested in loose condition. Kindly accept.	Bid Condition shall prevail.Bidder may be requested to adhere bid condition.

NHPC LIMITED

Lot-III: Electro-Mechanical works of (2X120 MW) Uri-I Stage-II HE Project

NIT No.- 2026_NHPC_906114_1 & Tender Reference No.:NH/Conts(EnM)-III/Uri-I Stage-II/ENM/2026/01, dated-29.05.2026

Reply of Queries pursuant to Pre-bid meeting held on 29.06.2026

For intimation to all Bidders

S. No.	Query Sr. No.	Volume / Clause No. & Name / Page No.	Description as per Bid Document	Bidder's Query/ Clarification	NHPC Comment
70	73	Volume- III D Model Quality assurance plan (MQAP) GSU Transformer, 8.C (k), Pdf Page 154 of 304	Functional check of Sudden Pressure relay	SPR comes duly tested from the manufacturer. TC for the same will be shared for review. Kindly accept.	Bid Condition shall prevail.Bidder may be requested to adhere bid condition.
71	74	Volume- III D Model Quality assurance plan (MQAP) BUS REACTOR, 1.3 (a, b), Air leakage Test on Tank, Pdf Page 156 of 304	Air Leakage Test on Transformer and Conservator a) Leak proofness test for Tank and conservator for 35 KN/ Sq. mm Pressure b) Vacuum withstand test for one Hour and permanent deflection measurement of flat plate.	Please note that, this is a design test. Therefore, Test will be applicable on only one tank / design. Kindly accept.	Bid Condition shall prevail.Bidder may be requested to adhere bid condition.
72	75	Volume- III D Model Quality assurance plan (MQAP) BUS REACTOR, 4.3, Insulating Oil, Pdf Page 157 of 304	Insulating Oil	We propose to accept manufacture's certificate in place of conducting the test.	Bid Condition shall prevail.Bidder may be requested to adhere bid condition.
73	76	Volume- III D Model Quality assurance plan (MQAP) BUS REACTOR, 6.1 (a-d), Core & Coil assembly., Pdf Page 159 of 304	Core & Coil assembly (a-d)	VHN proposed to accept test report carried out by the manufacturer in place of witnessing the test. Kindly accept.	Bid Condition shall prevail.Bidder may be requested to adhere bid condition.
74	77	Volume- III D Model Quality assurance plan (MQAP) BUS REACTOR, 8, Type and Special Test, Pdf Page 163 of 304	Type Test: a) Temperature Rise Test b) Measurement of Vibration c) Determination of Sound level Special Test a) Measurement of zero-sequence reactance b) Measurement of mutual reactance c) Measurement of harmonics of the current d) Determination of linearity of reactance e)Measurement of magnetic characteristic	VHN proposed to accept similar / higher rating Type test reports for review. Kindly accept.	Bid Condition shall prevail.Bidder may be requested to adhere bid condition.
75	78	Volume- III D Model Quality assurance plan (MQAP) BUS REACTOR, 8, Special Test, Pdf Page 163 of 304	f) Routine & Functional Test of Nitrogen Injection Fire Protection System (NIFPS) Test g) Online Moisture Monitoring & DGA analyser functional test	Please note that functional test of both NIFPS & DGA is not feasible at works due to works limitations.. Therefore, Functional test of these components would be demonstaed at site. Kindly accept.	1. For NIFPS -Bid Condition shall prevail.Bidder may be requested to adhere bid condition. **2. For Online Moisture Monitoring & DGA analyser -Refere Amendment No-1**
76	79	Volume- III D Model Quality assurance plan (MQAP) BUS REACTOR, Pdf Page 163 of 304	j) Jacking Test k) Dye penetration Test afterJacking Test	Kindly note that test performed during fabrication stage shall be shared for review. Kindly accept.	Bid Condition shall prevail.Bidder may be requested to adhere bid condition.
77	80	Volume- III D Model Quality assurance plan (MQAP) 400 kV XLPE cable, 1.1, Copper conductor, Pdf Page 165 of 304	Diameter, Surface Condition, Tensile & Elongation Test & Chemical Composition	Please note that Manufacture's test certificate for Mechanical & Chemical Properties shall be provided for copper rod. Kindly accept.	Bid Condition shall prevail.Bidder may be requested to adhere bid condition.

NHPC LIMITED

Lot-III: Electro-Mechanical works of (2X120 MW) Uri-I Stage-II HE Project

NIT No.- 2026_NHPC_906114_1 & Tender Reference No.:NH/Conts(EnM)-III/Uri-I Stage-II/ENM/2026/01, dated-29.05.2026

Reply of Queries pursuant to Pre-bid meeting held on 29.06.2026

For intimation to all Bidders

S. No.	Query Sr. No.	Volume / Clause No. & Name / Page No.	Description as per Bid Document	Bidder's Query/ Clarification	NHPC Comment
78	81	Volume- III D Model Quality assurance plan (MQAP) 400 kV XLPE cable, 1.3, Internal & External Semiconductive shield, Pdf Page 165 of 304	Viscosity, Scroch Time, Rheometer, Transversal Resistivity, Density	Please note that only Material TC with Density shall be provided.	Bid Condition shall prevail.Bidder may be requested to adhere bid condition.
79	82	Volume- III D Model Quality assurance plan (MQAP) 400 kV XLPE cable, 1.4, XLPE Compound, Pdf Page 166 of 304	Tensile Strength, Permittivity, Dielectric Loss angle	Please note that instead of Tensile Strength, Permittivity, Dielectric Loss angle, XLPE Insulation TC for Density, Water Containt & Volume Resisitivity shall be provided. Kindly accept.	**Refer Amendment No-1**
80	83	Volume- III D Model Quality assurance plan (MQAP) 400 kV XLPE cable, 2 (g)-ii, Electrical Type Test on Cables, Pdf Page 167 of 304	g(ii) High Voltage Test in water Immersion	As per IEC 62067, this test is not applicable.	**Refer Amendment No-1**
81	84	Volume- III D Model Quality assurance plan (MQAP) 400 kV XLPE cable, 5(f), Acceptance Test, Pdf Page 168 of 304	f) HV Test	As per IEC 62067, this test is not a part of sample test.	Bid Condition shall prevail.Bidder may be requested to adhere bid condition.
82	85	Volume- III D Model Quality assurance plan (MQAP) 400 kV XLPE cable, 5(i), Acceptance Test, Pdf Page 169 of 304	i) Water Containt Test	As per IEC 62067, this test is not a part of sample test.	**Refer Amendment No-1**
83	86	Volume- III D Model Quality assurance plan (MQAP) 400 kV XLPE cable, 5(k), Acceptance Test, Pdf Page 169 of 304	k) Lightning Impulse Voltage Test followed by a power frequency test	Please note that this test is applicable on 01 length, if cable length will lies between 04 Km and 20 Km as per IEC 62067 . Further, it is only Lightning impulse test as per applicable IEC. Kindly accept.	**Refer Amendment No-1**
84	87	Volume- III D Model Quality assurance plan (MQAP) 400 kV XLPE cable, 6 (a-h), FRLS Test, Pdf Page 169 of 304	FRLS Test (a-h)	As per IEC 62067, These tests are not applicable.	Bid Condition shall prevail.Bidder may be requested to adhere bid condition.
85	88	Volume- III D Model Quality assurance plan (MQAP) 420KV GIS SYSTEM, 6(C)-1-9, Routine Tests, Pdf Page 175 of 304	C. Current Transformer (1-9)	Please note that CT is bought out items.Thereforefore, we propose to accept Routine TC for review. Kindly accept.	Bid Condition shall prevail.Bidder may be requested to adhere bid condition.
86	89	Volume- III D Model Quality assurance plan (MQAP) 420KV GIS SYSTEM, 6(D)-1-6, Routine Tests, Pdf Page 176 of 304	D. Voltage Transformer (1-6)	Please note that VT is bought out items.Thereforefore, we propose to accept Routine TC for review. Kindly accept.	Bid Condition shall prevail.Bidder may be requested to adhere bid condition.

NHPC LIMITED

Lot-III: Electro-Mechanical works of (2X120 MW) Uri-I Stage-II HE Project

NIT No.- 2026_NHPC_906114_1 & Tender Reference No.:NH/Conts(EnM)-III/Uri-I Stage-II/ENM/2026/01, dated-29.05.2026

Reply of Queries pursuant to Pre-bid meeting held on 29.06.2026

For intimation to all Bidders

S. No.	Query Sr. No.	Volume / Clause No. & Name / Page No.	Description as per Bid Document	Bidder's Query/ Clarification	NHPC Comment
87	90	Volume- III D Model Quality assurance plan (MQAP) 420KV GIS SYSTEM, E(3-4), Acceptance Tests, Pdf Page 176 of 304	E. Surge Arrester	Please note that Surge Arrester is bought out items.Thereforefore, we propose to accept Routine TC for review. Kindly accept.	Bid Condition shall prevail.Bidder may be requested to adhere bid condition.
88	91	Volume- III D Model Quality assurance plan (MQAP) 220V & 48V DC SYSTEM, D(15-17), FINAL INSPECTION, Pdf Page 181 of 304	15)Parallel Redundant UPS Fault Test 16) Current Division in Parallel UPS 17) Unbalanced/Balanced Load Test	Kindly note that these test will be applicable for 3-Phase Inverter not for 1-Phase..	Bid Condition shall prevail.Bidder may be requested to adhere bid condition.
89	92	Volume- III D Model Quality assurance plan (MQAP) 220V & 48V DC SYSTEM, D 21, FINAL INSPECTION, Pdf Page 181 of 304	Heat Run Test	We propoose to accept Equivalent type test report. Kindly accept.	Bid Condition shall prevail.Bidder may be requested to adhere bid condition.
90	93	Volume- III D Model Quality assurance plan (MQAP) DC System - AC & DC DISTRIBUTION BOARD, 3, Components, Pdf Page 183 of 304	Components - DC contactors, Indicating lamps ,MCB,MCCB, Fuse,Switch,Push Buttons, Meters, Lamps, Electronic card onvertor & Diode (applicable for 220/48V DC-DC convertor	Please note that AC & DC Distributaion Board having only MCB. Therefore, other components are not applicable. COC shall be provided for the same. Kindly accept.	Bid Condition shall prevail.Bidder may be requested to adhere bid condition.
91	94	Volume- III D Model Quality assurance plan (MQAP) DC System - 220V BATTERY CHARGER, 2 (a), Cables, Pdf Page 185 of 304	a) Surface defects	Kindly note that Surface defect is not a part of routine test as per IS: 694.	Bid Condition shall prevail.Bidder may be requested to adhere bid condition.
92	95	Volume- III D Model Quality assurance plan (MQAP) DC System - 220V BATTERY CHARGER, 5(b), Type Test, Pdf Page 186 of 304	b) Power Loss determination for assemblies and equipments	Please note that Power Loss determination for assemblies and equipments is not applicable.	Bid Condition shall prevail.Bidder may be requested to adhere bid condition.
93	97	Volume- III D Model Quality assurance plan (MQAP) Cabling system, 5(a-f) & 6(a-c), XLPE Compound Semi-conducting compound, Pdf Page 201 of 304	5. XLPE Compound 6.Semi Conducting Compound	Manufacture's certificate as received shall be shared. Kindly accept.	Bid Condition shall prevail.Bidder may be requested to adhere bid condition.
94	98	Volume- III D Model Quality assurance plan (MQAP) Cabling system, 7, Accessories, Pdf Page 202 of 304	7.Accessories (as applicable)	Please note that MQAP is for cable testing. Hence these accessories are not applicable.	Bid Condition shall prevail.Bidder may be requested to adhere bid condition.
95	99	Volume- III D Model Quality assurance plan (MQAP) Cable Tray and Cable Junction Box, A-1(c), (MS Sheet/Channel /Angle), Pdf Page 209 of 304	c) Surface Finish	Please note that Surface Finish test is not applicable . Same doesn't appears on manufactuer's TC	Bid Condition shall prevail.Bidder may be requested to adhere bid condition.

NHPC LIMITED

Lot-III: Electro-Mechanical works of (2X120 MW) Uri-I Stage-II HE Project

NIT No.- 2026_NHPC_906114_1 & Tender Reference No.:NH/Conts(EnM)-III/Uri-I Stage-II/ENM/2026/01, dated-29.05.2026

Reply of Queries pursuant to Pre-bid meeting held on 29.06.2026

For intimation to all Bidders

S. No.	Query Sr. No.	Volume / Clause No. & Name / Page No.	Description as per Bid Document	Bidder's Query/ Clarification	NHPC Comment
96	100	Volume- III D Model Quality assurance plan (MQAP) Cable Tray and Cable Junction Box, A-2(a), Fasteners and Hardwares, Pdf Page 209 of 304	b) Quality of Zinc Deposit over Threaded Portion	Quality of Zinc deposit is not applicable on threaded portion. Instead mass of Zinc coating is applicable	**Refer Amendment No-1**
97	101	Volume- III D Model Quality assurance plan (MQAP) Cable Tray and Cable Junction Box, B(1-3), In Process Inspection, Pdf Page 209 of 304	In Process Inspection	Please note that supplier doesn't share in-process report. Therefore, TC is not feasible. It is to be further noted that all the galvanizing related tests are already present in final inspection.Kindly accept.	Bid Condition shall prevail.Bidder may be requested to adhere bid condition.
98	102	Volume- III D Model Quality assurance plan (MQAP) Cable Tray and Cable Junction Box, C.2, Final Inspection, Pdf Page 210 of 304	2) Load Capacity	Please note that Load Capacity test will be applicable on width 300 mm and above.	Bid Condition shall prevail.Bidder may be requested to adhere bid condition.
99	103	Volume- III D Model Quality assurance plan (MQAP) -MV SWITCHGEAR & AUXILIARY, A.1(a), Steel Sheel, Pdf Page 212 of 304	a) Material Testing	Pl. note that Instead of material testing of sheet, Mechanical & Chemical Properties of sheet is applicable. Kindly accept.	Bid Condition shall prevail.Bidder may be requested to adhere bid condition.
100	104	Volume- III D Model Quality assurance plan (MQAP) -MV SWITCHGEAR & AUXILIARY, A.3(a-d), FRP Sheets, Pdf Page 212 of 304	FRP Sheet	Pl. note that FRP Sheet (Fibre Re-inforced Plastic) is a non critical item.Supplier souced this sheet from the open market where they doesn't get certificate for the same. Hence TC is not feasible.	Bid Condition shall prevail.Bidder may be requested to adhere bid condition.
101	105	Volume- III D Model Quality assurance plan (MQAP) -MV SWITCHGEAR & AUXILIARY, A. 5-7,14,16 & 18, 5.Protective Relays (Over current & Earthault, Under voltage etc.) 6.KWH Meter 7. Indicating Instrument 10. HRC fuse 14. Switches/ Control Switches 16. Space Heater 18. Indicating Lamp, Push Button, Contact Block, Pdf Page 213-214 of 304	5. Protective Relays (Over current & Earthault, Under voltage etc.) 6.KWH Meter 7. Indicating Instrument 10. HRC fuse 14. Switches/ Control Switches 16. Space Heater 18. Indicating Lamp, Push Button, Contact Block	Please note that TC/ Certificate of compliance shall be provided. Kindly accept.	Bid Condition shall prevail.Bidder may be requested to adhere bid condition.
102	106	Volume- III D Model Quality assurance plan (MQAP) -MV SWITCHGEAR & AUXILIARY, A-8, MCCB, MCB & Contactor, Pdf Page 213 of 304	MCCB, MCB 8 Contactors	Please note that MCCB, MCB & Contactors will be sourced from authorized traders Therefore, TCs for these components are not feasible.	Bid Condition shall prevail.Bidder may be requested to adhere bid condition.

NHPC LIMITED

Lot-III: Electro-Mechanical works of (2X120 MW) Uri-I Stage-II HE Project

NIT No.- 2026_NHPC_906114_1 & Tender Reference No.:NH/Conts(EnM)-III/Uri-I Stage-II/ENM/2026/01, dated-29.05.2026

Reply of Queries pursuant to Pre-bid meeting held on 29.06.2026

For intimation to all Bidders

S. No.	Query Sr. No.	Volume / Clause No. & Name / Page No.	Description as per Bid Document	Bidder's Query/ Clarification	NHPC Comment
103	107	Volume- III D Model Quality assurance plan (MQAP) -MV SWITCHGEAR & AUXILIARY, A-9, 12 & 13, 9. Motor 12. Vacuum Interrupter 13. Spring Pdf Page 213 of304	9. Motor 12. Vacuum Interrupter 13. Spring	Please note these components are an integral part of Vacuum circuit breaker. No separate test certificate is feasible. Kindly accept.	Bid Condition shall prevail.Bidder may be requested to adhere bid condition.
104	108	Volume- III D Model Quality assurance plan (MQAP) -MV SWITCHGEAR & AUXILIARY, A-15, 15. Isolating Contacts Pdf Page 214 of 304	15. Isolating Contacts	This is not applicable as per design	**Refer Amendment No-1**
105	109	Volume- III D Model Quality assurance plan (MQAP) -Station Auxiliary transformer (SAT)- Dry type, A.4(a,b), Fibre Glass Sheet/ Insulation barriers, Pdf Page 217 of 304	Fibre Glass Sheet	This is not applicable as per design	Bid Condition shall prevail.Bidder may be requested to adhere bid condition.
106	110	Volume- III D Model Quality assurance plan (MQAP) -Station Auxiliary transformer (SAT)- Dry type, B.3 (a&d), Winding Temperature Indicator, Pdf Page 217 of 304	Winding Temperature Indicator a)Dial Size, Range , LC d) Alarm & Trip Operation	a) Please note that Instead of Dial Size, Model is applicable.List count (LC) doesn't appear on manufature's TC. b) Alarm & Trip Operation opeartion also doesn't appear on manufature's TC	Bid Condition shall prevail.Bidder may be requested to adhere bid condition.
107	111	Volume- III D Model Quality assurance plan (MQAP) -Station Auxiliary transformer (SAT)- Dry type, B.4, PTC Thermistor with alarm and trip device, Pdf Page 217 of 304	PTC Thermistor with alarm and trip device	This is not applicable as per drawing.	Bid Condition shall prevail.Bidder may be requested to adhere bid condition.
108	112	Volume- III D Model Quality assurance plan (MQAP) -Station Auxiliary transformer (SAT)- Dry type, B.5, Off Circuit Tap Changer, Pdf Page 217 of 304	Off Circuit Tap Changer	Please note that the taps are changed through tap link made of small copper strip by the transformer manufacturer. No certificate comes for this item	**Refer Amendment No-1**
109	113	Volume- III D Model Quality assurance plan (MQAP) -Station Auxiliary transformer (SAT)- Dry type, D1(a,b), Type Tests, Pdf Page 219 of 304	Type Test a) Temperature Rise Test b) Lightning Impulse Test	VHN propose to accept equivalent / higer rating type test in place of witnessing the test. Kindly accept.	Bid Condition shall prevail.Bidder may be requested to adhere bid condition.
110	114	Volume- III D Model Quality assurance plan (MQAP) - DG SET, 2(a,b), 5(a-c), Electronic qoverner AVR (Automatic Voltage Regulator), Pdf Page 222 of 304	Electronic qoverner AVR (Automatic Voltage Regulator)	Please note that Electronic governer and AVR are an intergral part of Engine. No separate manufacture's certificate comes for this item. Kindly accept	Bid Condition shall prevail.Bidder may be requested to adhere bid condition.

NHPC LIMITED

Lot-III: Electro-Mechanical works of (2X120 MW) Uri-I Stage-II HE Project

NIT No.- 2026_NHPC_906114_1 & Tender Reference No.:NH/Conts(EnM)-III/Uri-I Stage-II/ENM/2026/01, dated-29.05.2026

Reply of Queries pursuant to Pre-bid meeting held on 29.06.2026

For intimation to all Bidders

S. No.	Query Sr. No.	Volume / Clause No. & Name / Page No.	Description as per Bid Document	Bidder's Query/ Clarification	NHPC Comment
111	115	Volume- III D Model Quality assurance plan (MQAP) - DG SET, 7(a,b), Battery Charger, Pdf Page 222 of 304	Battery Charger	Please note that Battery Charger is in-built part of AMF Panel. No separate manufacture's certificate comes for this item.	Bid Condition shall prevail.Bidder may be requested to adhere bid condition.
112	116	Volume- III D Model Quality assurance plan (MQAP) - DG SET, 8 (a)-(d), Electrical Equipments, Pdf Page 223 of 304	• Circuit Breaker & Contactors, Neutral Earthing • Numeric Type Protection Relays (Reverse power, Differential Protection,Restricted Earth Fault, Under voltage, Under frequency, Very Low FuelLevel and Fail to start (Over crank) situation Instantaneous & IDMT overcurrent etc.) •CT, PT Meters (Ammeters, Voltmeter, Wattmeter, Energy Meter, Running Hour Meter, Frequency Meter, Alarms & Annunciation system etc.) •Push Buttons, Alarms & Annunciation system etc • Control & Selector Switch	Kindly note that all these item would be of make and same will be either sourced from authorized trader or open market. Hence Manufactuer's TC is not feasible. Kindly accept	Bid Condition shall prevail.Bidder may be requested to adhere bid condition.
113	117	Volume- III D Model Quality assurance plan (MQAP) - DG SET, 11 b(ii), Final Inspection on DG Set, Pdf Page 224 of 304	100% load test for 10 hr	Please note that due to common test bed (Production & Testing) limitation, Testing of DG set for 10 Hrs long duarion is not feasible at Works. Therefore VHN proposes to accept Load test duartion for 04 Hrs. Kindly accept.	Bid Condition shall prevail.Bidder may be requested to adhere bid condition.
114	118	Volume- III D Model Quality assurance plan (MQAP) - DG SET, 13, Monorail Hoist (If applicable), Pdf Page 224 of 304	Monorail Hoist (If applicable)	This is not applicable for DG set.	Bid Condition shall prevail.Bidder may be requested to adhere bid condition.
115	119	Volume- III D Model Quality assurance plan (MQAP) - LV SWITCHGEAR SYSTEM AND AUXILIARY TRANSFORMERS, A1(a), Steel Sheets, Pdf Page 226 of 304	a) Dimension(Size of Sheet, Uniformity of Thickness, Surface Finish)	a) Pl. note that manufactuer's TC doesn't specify test like Uniformity of Thickness, Surface Finish. Hence TC for the same is not feasible.	**Refer Amendment No-1**

NHPC LIMITED

Lot-III: Electro-Mechanical works of (2X120 MW) Uri-I Stage-II HE Project

NIT No.- 2026_NHPC_906114_1 & Tender Reference No.:NH/Conts(EnM)-III/Uri-I Stage-II/ENM/2026/01, dated-29.05.2026

Reply of Queries pursuant to Pre-bid meeting held on 29.06.2026

For intimation to all Bidders

S. No.	Query Sr. No.	Volume / Clause No. & Name / Page No.	Description as per Bid Document	Bidder's Query/ Clarification	NHPC Comment
116	120	Volume- III D Model Quality assurance plan (MQAP) - LV SWITCHGEAR SYSTEM AND AUXILIARY TRANSFORMERS, A(4-6,8,10-11), 4. MCCB / MCB 5. Power & Auxiliary Contactor 6. Overload Relay 8.Timers 10.Space Heater 11.witches/ Control Switches Pdf Page 226-228 of 304	4. MCCB / MCB 5. Power & Auxiliary Contactor 6. Overload Relay 8.Timers 10.Space Heater 11.witches/ Control Switches	Please note that these are trader based items to be procured from authorizied traders. Therefore, TC for such item is not feasible. We will submit COC against these items. Kindly accept.	Bid Condition shall prevail.Bidder may be requested to adhere bid condition.
117	121	Volume- III D Model Quality assurance plan (MQAP) - LV Bus Duct, 1.3, Epoxy Insulator, Pdf Page 229 of 304	d) Bending Resistance Test e) Thermal Shock tes	Kindly note that These tests doesn't appear on manufature's TC. Hence TC for these tests are not feasible. .	Bid Condition shall prevail.Bidder may be requested to adhere bid condition.
118	122	Volume- III D Model Quality assurance plan (MQAP) - Unit Auxiliary transformer (UAT), Station Service Transformer (SST), Distribution Transformer (DT), Auxiliary Transformer (AT) - Dry type, A.4(a,b), Fibre Glass Sheet/ Insulation barriers, Pdf Page 233 of 304	Fibre Glass Sheet	This is not applicable as per design	Bid Condition shall prevail.Bidder may be requested to adhere bid condition.
119	123	Volume- III D Model Quality assurance plan (MQAP) - Unit Auxiliary transformer (UAT), Station Service Transformer (SST), Distribution Transformer (DT) , Auxiliary Transformer (AT) - Dry type, B.3(a&d), Winding Temperature Indicator, Pdf Page 234 of 304	Winding Temperature Indicator a)Dial Size, Range , LC d) Alarm & Trip Operation	a) Please note that Instead of Dial Size, Model is applicable.List count (LC) doesn't appear on manufature's TC. b) Alarm & Trip Operation opeartion also doesn't appear on manufature's TC	Bid Condition shall prevail.Bidder may be requested to adhere bid condition.
120	124	Volume- III D Model Quality assurance plan (MQAP) - Unit Auxiliary transformer (UAT), Station Service Transformer (SST), Distribution Transformer (DT) , Auxiliary Transformer (AT) - Dry type, B.4, PTC Thermistor with alarm and trip device, Pdf Page 234 of 304	PTC Thermistor with alarm and trip device	This is not applicable as per drawing.	Bid Condition shall prevail.Bidder may be requested to adhere bid condition.

NHPC LIMITED

Lot-III: Electro-Mechanical works of (2X120 MW) Uri-I Stage-II HE Project

NIT No.- 2026_NHPC_906114_1 & Tender Reference No.:NH/Conts(EnM)-III/Uri-I Stage-II/ENM/2026/01, dated-29.05.2026

Reply of Queries pursuant to Pre-bid meeting held on 29.06.2026

For intimation to all Bidders

S. No.	Query Sr. No.	Volume / Clause No. & Name / Page No.	Description as per Bid Document	Bidder's Query/ Clarification	NHPC Comment
121	125	Volume- III D Model Quality assurance plan (MQAP) - Unit Auxiliary transformer (UAT), Station Service Transformer (SST), Distribution Transformer (DT) , Auxiliary Transformer (AT) - Dry type, B.5, Off Circuit Tap Changer, Pdf Page 234 of 304	Off Circuit Tap Changer	Please note that the taps are changed through tap link made of small copper strip by the transformer manufacturer. No certificate comes for this item	**Refer Amendment No-1**
122	126	Volume- III D Model Quality assurance plan (MQAP) - Unit Auxiliary transformer (UAT), Station Service Transformer (SST), Distribution Transformer (DT) , Auxiliary Transformer (AT) - Dry type, C1(a,b), Type Tests, Pdf Page 235 of 304	Type Test a) Temperature Rise Test b) Lightning Impulse Test	VHN propose to accept equivalent / higer rating type test in place of witnessing the test. Kindly accept.	Bid Condition shall prevail.Bidder may be requested to adhere bid condition.
123	127	Volume- III D Model Quality assurance plan (MQAP) - ILLUMINATION SYSTEM, A.I. 1, A.I. 4, Raw Material, Pdf Page 238 of 304	1. Aluminium Casting 2. LED Driver	Please note that Aluminium casting & LED Driver are an integral part of luminaries. Complete luminaries a will be sourced from authorized traders. No Manufacture's provide individual components certificates. Hence TC is not feasible Kindly accept.	Bid Condition shall prevail.Bidder may be requested to adhere bid condition.
124	128	Volume- III D Model Quality assurance plan (MQAP) - ILLUMINATION SYSTEM, A.I.3, Raw Material, Pdf Page 238 of 304	Paint	Paint is not applicable.	Bid Condition shall prevail.Bidder may be requested to adhere bid condition.
125	129	Volume- III D Model Quality assurance plan (MQAP) - ILLUMINATION SYSTEM, A.II.2(a), Raw Material, Pdf Page 239 of 304	Dimension Conformity	Please note that in manufacture's TC, Dimension Conformity doesn't appears. Hence TC is not feasible.	Bid Condition shall prevail.Bidder may be requested to adhere bid condition.
126	130	Volume- III D Model Quality assurance plan (MQAP) - ILLUMINATION SYSTEM, A.II.3, Acceptance Tests, Pdf Page 239 of 304	3. Acceptance Test (a-e)	Please note that Luminaries will be sourced from authorised trader. Therefore, Only Make & Type will be feasible. Rest is not feasible.	Bid Condition shall prevail.Bidder may be requested to adhere bid condition.
127	131	Volume- III D Model Quality assurance plan (MQAP) - ILLUMINATION SYSTEM, B. 5, Raw Materials & Bought Out Items, Pdf Page241 of304	MCCB, MCB, ELCB, Power & Auxiliary Contactors, Timer, Annunciater,Receptacle, Switches, Control Switches, Transducer, Current Transformer, Potential Transformer, Electrical Meters(Ammeter, Voltmeter, Energy meter), Indicator lamp, TB, Fuse, SpaceHeater,Thermostat etc.	Please note that Manufacture's TC as received from component manufacturers like Current Transformer, Potential Transformer, Electrical Meters (Ammeter & Voltmeter) shall be provided. Certificate of Compliance (COC) for the rest of the components. Annunciater, Transducer and Energy Meters are not as per design. Hence, same will not be applicable.	Bid Condition shall prevail.Bidder may be requested to adhere bid condition.

NHPC LIMITED

Lot-III: Electro-Mechanical works of (2X120 MW) Uri-I Stage-II HE Project

NIT No.- 2026_NHPC_906114_1 & Tender Reference No.:NH/Conts(EnM)-III/Uri-I Stage-II/ENM/2026/01, dated-29.05.2026

Reply of Queries pursuant to Pre-bid meeting held on 29.06.2026

For intimation to all Bidders

S. No.	Query Sr. No.	Volume / Clause No. & Name / Page No.	Description as per Bid Document	Bidder's Query/ Clarification	NHPC Comment
128	132	Volume- III D Model Quality assurance plan (MQAP) - ILLUMINATION SYSTEM, C.2(a), Aluminium Ladder& Adjustable Platform, Pdf Page 242 of 304	a) Raw Material	Please note that Ladder is a ready made item and same will be souced either from open market or traders. Therefore, Raw material certificate is not feasible.	Bid Condition shall prevail.Bidder may be requested to adhere bid condition.
129	133	Volume- III D Model Quality assurance plan (MQAP) - ILLUMINATION SYSTEM, C.2(c), Aluminium Ladder& Adjustable Platform, Pdf Page 242 of 304	c) Routine Test	Routine Test is not applicable.	Bid Condition shall prevail.Bidder may be requested to adhere bid condition.
130	134	Volume- III D Model Quality assurance plan (MQAP) - ILLUMINATION SYSTEM, C.3 (a), Junction Box, Switchboard & Receptacle, Pdf Page 242 of 304	a) Raw Material c) Routine Test	a) Please note that Junction Box, Switch board & Receptacle is a ready made item and same will be souced either from open market or traders. Therefore, Raw material certificate for these small items c) Routine test is not applicable.	Bid Condition shall prevail.Bidder may be requested to adhere bid condition.
131	135	Volume- III D Model Quality assurance plan (MQAP) - ILLUMINATION SYSTEM, 6(a), Inverter, UPS & Battery, Pdf Page 242 of 304	a) Raw Material	Please note that raw material cetificate for this small rating standard item is not feasinble. Kindly accept.	Bid Condition shall prevail.Bidder may be requested to adhere bid condition.
132	136	Volume- III D Model Quality assurance plan (MQAP) - ILLUMINATION SYSTEM, 6(b), Inverter, UPS & Battery, Pdf Page 242 of 304	Routine Test.	Manufacture's certificate as received shall be shared instead witnessing the test. Kindly accept.	Bid Condition shall prevail.Bidder may be requested to adhere bid condition.
133	137	Volume- III D Model Quality assurance plan (MQAP) - COMMUNICATION SYSTEM, A.2(b)-(ii), Type Test, Routine Test, Pdf Page 244 of 304	ii) Type Test ii) Routine Test	Kindly note that these are trader based items. Hence , Type & Routine test certificate iare not feasible.Kindly accept.	Bid Condition shall prevail.Bidder may be requested to adhere bid condition.
134	138	Volume- III D Model Quality assurance plan (MQAP) - COMMUNICATION SYSTEM, A.2(c)-(ii), Central paging control & amplifier rack, Pdf Page 244 of304	Functional Test & Mounting Arrangements	Test is not feasible at Trader place. Same will be demonstrated at site during commissioning.	Bid Condition shall prevail.Bidder may be requested to adhere bid condition.
135	139	Volume- III D Model Quality assurance plan (MQAP) - COMMUNICATION SYSTEM, A.6(i), Junction Box, Pdf Page 245 of 304	Make, Model & Rating	Junction Box has No make, Model & Rating. It is to be fabrcated item as per drawing. Hence same is not applicable.	Bid Condition shall prevail.Bidder may be requested to adhere bid condition.
136	140	Volume- III D Model Quality assurance plan (MQAP) - COMMUNICATION SYSTEM, C.4(i), Conference Table, Chairs, Pdf Page 247 of 304	Make, Model & Specification	Please note that in the case of Conference Table & Chair, Make and Specification is not applicable as we don't have any name plate.Only model is applicable.	Bid Condition shall prevail.Bidder may be requested to adhere bid condition.

NHPC LIMITED

Lot-III: Electro-Mechanical works of (2X120 MW) Uri-I Stage-II HE Project

NIT No.- 2026_NHPC_906114_1 & Tender Reference No.:NH/Conts(EnM)-III/Uri-I Stage-II/ENM/2026/01, dated-29.05.2026

Reply of Queries pursuant to Pre-bid meeting held on 29.06.2026

For intimation to all Bidders

S. No.	Query Sr. No.	Volume / Clause No. & Name / Page No.	Description as per Bid Document	Bidder's Query/ Clarification	NHPC Comment
137	141	Volume- III D Model Quality assurance plan (MQAP) - COMMUNICATION SYSTEM, D.1-(i)-(iii), Components of Communication System, Pdf Page 248 of 304	1) Type Test	Please note that product will be proven design and same will be procured from reputed trader. Therefore, Type test is not feasible as no manufacture's shares such type test to any traders..	Bid Condition shall prevail.Bidder may be requested to adhere bid condition.
138	142	Volume- III D Model Quality assurance plan (MQAP) - COMMUNICATION SYSTEM, D.2-(i)-(ii), Routine Test, Pdf Page 248 of 304	i) Di-electric Test ii) Test on Protective Earthing Connections	This is an electronic device and comes in completely assembled condition after testing.Therefore these tests are not feasible.	Bid Condition shall prevail.Bidder may be requested to adhere bid condition.
139	143	Volume- III D Model Quality assurance plan (MQAP) - Grounding System, 2(iii), Final Inspection, Pdf Page 272 of 304	Electrical Resistance of Material	This test is not applicable on MS Flat / Rod.	Bid Condition shall prevail.Bidder may be requested to adhere bid condition.
140	144	Vol-III A (General Technical Specification), 6.4.9 A, Workshop Tests:, Pdf Page 41-42 of 106	iii) Measurement of starting current and torque iv) Efficiency measurement (type test) v) Heat test run	Kindly note that mentioned tests are Type test. Therefore, we shall provide test report fpr equivalent frame size of Motors for review. Kindly accept.	Bid Condition shall prevail.Bidder may be requested to adhere bid condition.
141	145	VOLUME – III D: QUALITY TEST SPECIFICATIONS (QTS), 7.3, Field Tests, Pdf Page 29 of 304	Measurement of bus duct losses	Kindly note that VHN will submit loss calculation during design stage. Loss measurements at site is not feasibile. Kindly accept.	Bid Condition shall prevail.Bidder may be requested to adhere bid condition.
142	146	VOLUME – III D: QUALITY TEST SPECIFICATIONS (QTS), 27.1, Type Test, Pdf Page 64 of 304	The contractor is required to carry out all type tests as per relevant IEC/ International Standards on one apparatus of each type of similar rating and shall submit the reports to the Employer. The type test may not be mandatory if similar equipment has been type tested (Valid Type Test as per latest CEA Guide Lines of MOP, GOI) and test certificate (S) subject to acceptance of employer.	Kindly note that type test for GI earthing strips will not be feasible. VHN will submit only required design calculation during detailed engineering.	Bid Condition shall prevail.Bidder may be requested to adhere bid condition.

Uri -I Stage-II HEP (2x120 MW)							
INFORMATIVE REPLIES-TECHNICAL							
S No	**BID SPECIFICATION**				**SPECIFICATION REQUIREMENT**	**Pre-Bid Queries/ Clarifications**	**NHPC Reply**
	Section	**Sub-Section**	**Page No.**	**Clause No.**			
1	-	Fire Fighting System	Page 19 of 42 Vol-IV	NH/DEM/URI-I STG-II/FF/01	Fire Fighting Storage Tank Location	Please indicate the location of Fire water Storage tank location. Based on the location Fire fighting piping network piping will be routed through oiut the plant.	Kindly refer clause 29.2.1 of technical specification. Tender provisions are clear in this regard.