एनएचपीसी लिमिटेड

(भारत सरकार का एक नवरत्न उद्यम)

NHPC Limited

(A Government of India Navratna Enterprise)

A Navratna Company

STANDARD BIDDING DOCUMENT
FOR
DOMESTIC COMPETITIVE BIDDINGS

कार्य का नाम: मानसून 2025 के दौरान सलाल पावर स्टेशन के टीआरटी क्षेत्र में हुये क्षतिग्रस्त की मरम्मत।

Name of Work: Repair of damaged at TRT area during monsoon 2025 at Salal Power Station, Jyotipuram.

निविदा विनिर्देश सं.-: एनएच/सीडी/एसपीएस/एनआईटी-115/2025-26/1139-48 **दि०: 23/03/2026**

Tender Reference No.: NH/SPS/CD/NIT-115/2025-26/1139-48 dated: 23/03/2026

TABLE OF CONTENTS

Name of Work: Repair of damaged at TRT area during monsoon 2025 at Salal Power Station, Jyotipuram.

Section	Description	Page
Section -I	Press Notice & Notice Inviting E-Tenders	3
Section -II	Instructions to Bidders (ITB), Bidding data, IFB	16
Section -III	Letter of Tender Form, Qualification Information, Form of declaration	52
Section -IV	General Conditions of Contract and Schedules	92
Section -V	Forms	176
Section -VI	Special Conditions of Contract	201
Section -VII	Schedule of Quantities and Prices	207
Section -VIII	Technical Specifications and Safety Manual	211
Section -IX	Drawings	212

एनएचपीसी लिमिटेड

(भारत सरकार का एक नवरत्न उद्यम)

NHPC Limited

(A Government of India Navratna Enterprise)

खण्ड-I

SECTION-I

ई -निविदा आमंत्रण सूचना

NOTICE INVITING E-TENDER

एनएचपीसी लिमिटेड
(भारत सरकार का उद्यम(
NHPC Limited
(A Govt. of India Enterprise)
((ISO 9001:2015,14001:2015 & 45001:2018 Certified)
CIN: L40101HR1975GOI032564

प्रापण व संविदा विभाग,
सलाल पावर स्टेशन, ज्योतिपुरम,
जिला-रियासी) जम्मू व कश्मीर(
Procurement & Contract Division,
SALAL POWER STATION,
JYOTIPURAM, Distt. REASI,
UT of (J & K)- 182312
Tel/ Fax- 01991-255481/255485
e-mail: salal-procurement@nhpc.nic.in

Regd. Office: NHPC Office Complex, Sector-33, Faridabad-121003 (Haryana)
(ISO 9001:2015,14001:2015 & 45001:2018 Certified)

Tender Reference No NH/SPS/CD/NIT-115/2025-26/1139-48 Dated: 23/03/2026

Notice Inviting E-Tender (Press Note if required)

Online Bids are invited for and on behalf of NHPC Ltd. through eligible domestic bidders for "**Repair of damaged at TRT area during monsoon 2025 at Salal Power Station, Jyotipuram**". Complete bid document can be downloaded and submitted through the portal https://eprocure.gov.in/eprocure/app. The site can also be viewed through e-procurement corner of NHPC website www.nhpcindia.com and CPP Portal. The last date of submission of online bids is **14/04/2026**. For further details, please visit https://eprocure.gov.in/eprocure/app. Subsequent amendments, if any, shall be posted only on the aforesaid websites.

एनएचपीसी लिमिटेड
(भारत सरकार का उद्यम(
NHPC Limited
(A Govt. of India Enterprise)
((ISO 9001:2015,14001:2015 & 45001:2018 Certified)
CIN: L40101HR1975GOI032564

प्रापण व संविदा विभाग,
सलाल पावर स्टेशन, ज्योतिपुरम,
जिला-रियासी) जम्मू व कश्मीर(
Procurement & Contract Division,
SALAL POWER STATION,
JYOTIPURAM, Distt. REASI,
UT of (J & K)- 182312
Tel/ Fax- 01991-255481/255485
e-mail: salal-procurement@nhpc.nic.in

Regd. Office: NHPC Office Complex, Sector-33, Faridabad-121003 (Haryana)
(ISO 9001:2015,14001:2015 & 45001:2018 Certified)

Tender Reference No NH/SPS/CD/NIT-115/2025-26/1139-48 Dated: 23/03/2026

Domestic Competitive Bidding
(E-Tendering-Web Notice)

1. Online "**~~Item Rate~~/Percentage Rate**" (*to strike out which is not applicable*) bids are invited through **Domestic Competitive Bidding in Single Stage -Two Part Bidding** Basis {i.e. Part-I (Cover-I): Technical- Bid and Part-II (Cover-II): Financial Bid} for and on behalf of NHPC Ltd. *(A Govt. of India Enterprise)* from eligible **Sole Bidders** for the work of "**Repair of damaged at TRT area during monsoon 2025 at Salal Power Station, Jyotipuram**."

A. Brief details of the tender:		
Sl. No.	**Item**	**Description**
i)	निविदा की विधि/ Mode of Tendering	e-Procurement System Cover-I: Online Techno-Commercial Bid Cover-II: Price Bid
ii)	निविदा आईडी संख्या/ Tender ID No. at CPP Portal	**2026_NHPC_903326_1**
iii)	निविदा विनिर्देश सं./ Tender Reference No.	**NH/SPS/CD/NIT-115/2025-26/1139-48 dated: 23/03/2026**
iv)	निविदा प्रपत्र राशि/ Cost of Bidding Document	**₹1180/-** (One thousand one hundred and eighty only) in the form of **Crossed Demand Draft only** in favour of **"NHPC Limited"** payable at '**SBI Jyotipuram**' towards the cost of bidding document. The bidder shall fill the Cost of bidding document details in his online bid and submit DD details to Tender Inviting Authority on or before the date as specified in NIT with offline submissions.
v)	धरोहर राशि/ Bid Security (EMD)	**₹1,08,000/-** (One lakh eight thousand only) payable in favor of "**NHPC Limited**" payable at 'SBI Jyotipuram' **in the form of Crossed Demand Draft Or Insurance**

		Surety Bond or in the form of Bank Guarantee issued by an Indian Nationalized Bank. Bank guarantee shall be valid up to three months beyond the Bid validity period as per format appended as Form-2 of Section-V. Failure to do so may prevent a tender from being considered. The bidder shall fill the EMD details in his online technical bid and submit DD to Tender Inviting Authority on or before the date as specified in NIT. **Bank Details for EMD is as follow:** **Name of the beneficiary: NHPC Limited** **Account No.: 11391767764** **IFSC Code: SBIN0003704** **Address of the Bank: SBI Jyotipuram**
vi)	बोली की अपेक्षित वैधता /Period of Bid Validity	120 days
vii)	आंकलित लागत/ Estimated cost	**₹ 53,90,406/-(including GST@18% & 1% Cess)**
viii)	कार्य करने के लिए दिया गया समय/ Completion Period	**4 Months**
ix)	निविदा आमंत्रण अधिकारी/ Tender Inviting Authority	महाप्रबंधक (विद्युत), प्रापण एवं संविदा विभाग / General Manager (Elect.), P&C Division, Salal Power Station
B. Critical dates of tender:		
x)	निविदा प्रकाशन की तिथि और समय/ Publishing Date & Time	23/03/2026 (17:00 Hrs)
xi)	निविदा प्रपत्र बेचनें /डाउनलोड प्रारंभ करने की तिथि/ Document Download Start Date & Time	23/03/2026 (17:00 Hrs)
xii)	~~Pre bid meeting Date & Time~~	Not Applicable
xiii)	~~Last date of Receipt of clarification of Bid~~	N/A
xiv)	ऑनलाइन बिड जमा प्रारंभ करने की तिथि और समय/ Bid Submission Start Date & Time	23/03/2026 (17:00 Hrs)

xv)	ऑनलाइन बोली प्रस्तुत करने की अंतिम तिथि और समय/ Online Bid Submission Closing Date & Time	**14/04/2026 (17:00 Hrs)**
xvi)	ऑफलाइन दस्तावेज़) निविदा प्रपत्र राशि, धरोहर राशि एवं अन्य सहायक दस्तावेज़ आदि (जमा करने की अंतिम तिथि/ Offline submission closing (address, date & time)	**20/04/2026, 17:00 Hrs** **महाप्रबंधक (विद्युत), प्रापण एवं संविदा विभाग/** General Manager (Elect.), P&C Division, Salal Power Station, Jyotipuram, Reasi, (J&K), PIN-182312, Email: salal-procurement@nhpc.nic.in Phone No. 01991-255459/255481 **Or** Additional Venue for Submission of Offline documents: (a) Coordinator-Offline bids, Manager (C&P), Contract & Procurement Wing, O/O Executive Director, NHPC Ltd., JDA Commercial Complex, Narwal, Jammu, Distt. – Jammu, (J&K)-180006 ~~**Or**~~ ~~Co-ordinator Off-line Bids, Contracts (E&M) Div, Corporate Office, NHPC Limited, Sector-33, Faridabad, Haryana- 121003~~
xvii)	तकनीकी बोली खोलने की तिथि और समय/ Online Bid Opening of Technical Bid (Cover-I) Date & Time	Venue: O/o General Manager (PCS), Salal Power Station. Date & time: 21/04/2026 (17:00 Hrs)
xviii)	मूल्य बोली खोलने की तिथि और समय/ Price bid Opening (Cover-II) Date & Time	Venue, Date & time to be intimated later to the bidders whose Techno- commercial Bids will be found responsive
xix)	~~Date & Time of Start of e-Reverse Auction (if applicable)~~	~~Shall be intimated separately~~

1.1 Complete Bid Document /Tender Document can be viewed and down loaded from Central Public Procurement (CPP) Portal **https://eprocure.gov.in/eprocure/app**. The site can also be viewed through e-procurement corner of NHPC website **www.nhpcindia.com** and CPP Portal. Any Bidder who wishes to quote for this Tender can download the Tender Document from aforesaid portal after online Bidder registration for e-tendering.

2. Eligible Bidders

2.1 This Invitation for Bid is open to:

a) The bidders who are incorporated legal entity and are legally and financially autonomous and operate under commercial law of their respective jurisdiction.

b) All bidders meeting the Qualification criteria as defined in clause 3.

c) Bidder shall be Class-I Local Supplier under Public Procurement (Preference to Make in India), Order-2017 issued by the Department of Promotion of Industry and Internal Trade (DPIIT), Ministry of Commerce and Industry vide No.P- 45021/2/2017-PP (BE-II) dated 16.09.2020 or as amended from time to time. Bidders shall submit undertaking/self-certificate regarding Local content in the format provided**.** Bidder shall also give details of the location(s) at which the local value addition is made.

Public Procurement (Preferences to Make in India) Policy (including its latest modifications/amendments) as may be prevailing on the date of Price Bid Opening shall be applicable against this tender. Bidders are requested to go through the Public Procurement (Preferences to Make in India) policy available on concerned ministry website.

d) Bidder shall comply with the provisions of "Restrictions under Rule 144(xi) of the General Financial Rules (GFRs) 2017" issued by Department of Expenditure, Ministry of Finance dated 23.07.2020 and subsequent amendments.

2.2 Bidders shall not be under declaration of ineligibility for banning / delisting / blacklisting / debarment from business on the ground mentioned in para 6 of Guidelines on Banning of Business dealings (Annexure-A) to Integrity Pact at the time of submitting the bid and shall intimate immediately of any such banning / delisting / blacklisting / debarring after submission of bid till award of tender. Self- Declaration in this regard is to be submitted as per the enclosed proforma (Form-6, Section-III).

2.3 The Bidders whose contract(s) have been terminated due to unsatisfactory performance by employer in past, shall not be allowed to participate in the bidding process till completion of the ineligibility period.

~~2.4 To improve transparency and fairness in the tendering process the Employer is implementing Integrity Pact.~~

~~The Integrity Pact, signed by all the prospective Bidders and the Employer, shall commit the persons/officials of both the parties, not to exercise any corrupt/ fraudulent/collusive/coercive practices in the Tendering process and also during implementation of the Contract. Only those Bidders who have entered into Integrity Pact with the Employer shall be eligible to participate in the bidding process.~~

~~All Applicants shall enter into an Integrity Pact (to be executed on plain paper) with the Employer at the time of submission of their Bids. The Integrity Pact digitally signed / signed on behalf of the Employer shall be as per Form-7 Section-III. The Integrity Pact shall be downloaded, printed and signed by the Applicant and to be submitted online.~~

~~Successful bidder shall submit duly executed Integrity pact on Non-Judicial Stamp paper of appropriate value prior to signing of Contract Agreement.~~

~~To oversee the compliance of obligation under the Integrity Pact, (*name*~~

~~*of IEM)* has been appointed as Independent External Monitor (IEM) by the Employer. The Contact address of IEM is as under:~~

~~Dr. Vinod Aggarwal, B-103, Sarvodaya Enclave, 2nd Floor, New Delhi-110017 e-mail: arsv50@gmail.com~~	~~Shri Prabhash Singh, E7 M702, Housing Board Colony, Arera Colony, Bhopal, Madhya Pradesh-462016 Email: srgmhrbpl@gmail.com~~	~~Shri Upendra Malik, B-108, NSG Society, Plot-2, Pocket-6, Builders Area, Greater Noida-201315(UP) Email: upendra.malik@gmail.com~~

~~(*Note: Integrity pact to be included /excluded as per threshold limit circulated by NHPC Corporate office time to time*.~~ ***Guidelines for Banning of Business Dealings shall be part of all contracts)***

3. Qualification of the Bidder

3.1 All bidders shall include the following information and documents with their bids in, Qualification Information unless otherwise stated in the ITB:

a) Copies of original documents defining the constitution or legal status, place of registration, and principal place of business; written power of attorney of the signatory of the Bid to commit the Bidder. Additional information as sought in the Form-1 General Information, Section-III shall be provided;

b) Work experience to demonstrate meeting the criteria stipulated in clause 3.2 A (b) shall be provided in Form -3 work experiences record, Section-III. The work experience shown shall be supported with certificate(s) from the Engineer-in- charge/Project head of the concerned work. In case of experience certificates produced by the contractors for having executed works for Private Organizations, TDS Certificates / Form 26AS / Annual Information Statement (AIS) shall also be produced along with experience certificate***.***

c) Information on financial criteria stipulated in clause 3.2A (a) shall be furnished in Form -4, Annual turnover, Section-III. Copy of affidavit/Certificate of CA mentioning Annual turnover of last 3 (three) years. Printed Annual reports or financial statements of the Bidder, such as balance sheet, profit and loss statements and auditor's reports as the case may be for the past three years shall be submitted to ascertain bidder's meeting the financial criteria. The CA Certificate should have the Unique Document Identification Number (UDIN) as per Gazette Notification No. 1- CA(7)/192/2019 dated 02.08.2019.

~~d) the proposed methodology (Schedule- G in separate sheets) and programme of construction (in Schedule- E), backed with equipment planning and deployment (in Schedule-F), duly supported with broad calculations, justifying their capability of execution and completion of the~~

~~work as per technical specifications and within the stipulated period of completion.~~

~~*Note:- Schedule E, F, G can be deleted by projects for small value of works and depending upon the nature of works.*~~

3.2 A **To qualify for award of the Contract, each bidder should have:**

a) Achieved in any one year in **last three years** a minimum Annual turnover of **at least equivalent to the estimated cost** of works for which bid has been invited.

b) Satisfactorily completed, in **last seven years** ending on last day of month previous to one in which applications are invited, at least one similar work costing not less than the amount equal to 80% of the estimated cost of work or two similar works costing not less than the amount equal to 50% of estimated cost of work or three similar works not less than the amount equal to 40% of the estimated cost of works.
For arriving at the cost of similar work, the value of work executed shall be brought to current costing level by enhancing the actual value of work at simple rate of seven percent per annum, calculated from the date of completion to the date of bid opening.
Note: Similar work means, **"Any type of Civil Construction/repair Works"**

Note- In support of qualification criteria, bidder have to submit self-attested copies of WO/LOA along with completion certificate issued by concerned authority.

3.2 B. Each bidder must also submit with their Bid:

i) Copies of PAN, GST Registration No., EPF Registration No. and ESIC Registration No. (As applicable).

ii) A declaration that the information furnished with the bid documents is correct in all respects in form-5, form of declaration, Section-III.

iii) Such other certificates if any as defined in the ITB.

3.2 **C** To qualify for Contract for which bids are invited in the Notice Inviting Tender, the bidder must demonstrate having work experience, financial capability and resources sufficient to meet the aggregate of the qualifying criteria. Failure to produce the certificates and documents in clauses 3.1 and 3.2(A) & (B) shall make the bid non-responsive.

3.2D JVs or any other arrangement other than sole bidder is not allowed. Experience and resources of proposed sub-contractor, if any shall not be taken into account in determining the bidder's compliance with the qualifying criteria. However, experience of bidder as sub- contractor approved by Project developer shall be considered. Experience of bidders as member of Consortium/Joint Venture shall be considered as per distribution of work against the member of the Consortium/Joint Venture. In case where distribution of Consortium/JV members is not specified in Consortium/JV agreement then the experience credential shall be considered for all members of JV with minimum 35% participation share.

3.2 E ~~All Startups (whether MSEs or otherwise) registered for similar nature of work falling within the definition as per Gazette notification- GSR 127(E) dated 19.02.2019 or as amended from time to time are exempted from meeting the qualification criteria in respect of Prior Experience-Prior Turnover as per para 3.2 A subject to their meeting the quality and technical specification. However, the Employer reserves the right to deny such exemptions to Startups in case of circumstances like procurement of items related to public safety, health, critical security operations and equipment, etc.~~

3.2 F **Insolvency**

The Bidder against whom an application for initiating corporate insolvency resolution process has been admitted by the Adjudicating Authority under the Insolvency and Bankruptcy code 2016 or as amended from time to time shall not be eligible for bidding. The same shall also be applicable to the bidder company who has taken unconditional technical and/or financial support from their Parent/ Holding Company, against whom an application for initiating corporate insolvency resolution process has been admitted by the Adjudicating Authority under the Insolvency and Bankruptcy Code 2016, or as amended from time to time (IBC 2016 hereafter).

In case, bidder in respect of whom any application for initiating corporate insolvency resolution process was not admitted at the time of submission of bid but subsequently during the period of evaluation of bids or any time before the work is awarded, any such application is admitted by the Adjudicating Authority under the IBC 2016, the bidder shall be considered as ineligible and his bid shall be rejected.

An undertaking that "no insolvency proceedings is admitted by the Adjudicating Authority against bidder under the IBC 2016" shall be submitted on letter head duly signed by the authorized representative of bidder.

Further, the bidder after submitting the bid till the time of award of work, shall inform NHPC regarding any admission of application for corporate insolvency resolution process by the Adjudicating Authority under the IBC 2016 against bidder and any suppression of such fact shall render the bidder liable for

rejection of his bid and banning of business dealing as per terms and conditions of the Bid Document.

3.3 **Disqualification:**

Even though the bidders meet the above qualifying criteria, they are subject to be disqualified if they have:

(i). made misleading or false representations in the forms, statements, affidavits, declarations and attachments submitted in proof of the qualification requirements; and/or,

(ii). participated in the previous bidding for the same work & found L-1 and had quoted abnormally high or low bid prices and could not furnish rational justification for it to the Employer,

(iii). The Bidders whose contract(s) have been terminated due to unsatisfactory performance by employer in past, shall not be allowed to participate in the bidding process till completion of the ineligibility period. In such case the bid shall be considered as non-responsive.

~~*Note: - qualification criteria given above is illustrative and can be modified /adapted with proper reasons and justification to suit specific needs of the Project by Head of the Project/Region in case of award falling in the competence of Project and Head of the Region in case of award falling in the competence of Region ED.*~~

4.0 Time for Completion

The successful bidder shall complete the entire work within the time specified at Sl no-1, to be reckoned from the date of issue of Letter of Acceptance issued by the Employer.

5.0 Tenders must be accompanied by the earnest money of the amount specified for the work in the table.

~~**6.0 Pre-Bid Meeting**~~

~~a) If required, a Pre-Bid meeting open to all the prospective Bidder(s) will be held at venue, date and time as per Sl. No.-1 wherein they shall be given an opportunity to obtain clarifications, if any, regarding the work and Bid conditions.~~

~~b) Prospective Bidder(s) may submit their queries, if any, by email / courier / at address stated at Para – 1(A)(ix) of NIT at least 03 days before the pre-Bid meeting so that the same can be replied during the meeting.~~

7.0 Bid submission

i) Online Bid Submission – Technical Bid (Cover-I) (Refer Section- II i.e. ITB) and Price Bid (Cover-II) electronic format) complete in all respect must be uploaded at the aforesaid portal before the specified date & time as per Sl. No. 1.

ii) Offline Bid Submission (Refer Section- II i.e ITB) complete in all respect must be delivered in sealed envelopes to the address, up to the specified date & time as per Sl. No. 1

In the event of the specified date or amendment if any for the submission of bids being declared a holiday for the Employer, the hard copy of the documents will be received up to the specified time on the next working day. Similarly, in the event of the specified date or amendment if any for the opening of bids being declared a holiday for the Employer, the opening shall be carried out at the specified time on the next working day. However, the date and time for online submission of the Bids shall continue to be the date and time specified or amendment if any.

8.0 The currency for the Bid shall be Indian Rupee only.

9.0 Bids shall be valid for a period as mentioned in Sl no. 1 after the deadline for Bid submission. If any Bidder withdraws his Bid before the said period or makes any modification in his Bid, the Earnest Money deposit of the Bidder shall be forfeited. Prior to the expiry of bid validity period, Employer may request Bidders to extend the Bid validity period. The request and the response shall be made in writing. An extension of the bid validity period will not entitle a Bidder to modify its Bid. In case Bidder fails to extend the bid validity upon employer's request, the corresponding Bid shall be rejected as being non-responsive.

10.0 The Techno-commercial Bid shall be opened online at venue date & time as per Sl. No.-1. The time and date of opening of Financial Bid of bidders qualified the technical bid shall be communicated through portal at later date after evaluations of technical bids. The Employer/Tender inviting Authority at his discretion may open Technical and Financial Bid simultaneously and evaluate the Bid completely.

11.0 The Employer may impose certain restrictions on the foreign companies participating in any form and their employees in view of the National Security, in the Project situated in the sensitive region and border areas. The Employer shall obtain clearance of Govt. of India regarding security implications prior to qualification of such company. Further, bidders from countries which share land border with India shall comply with Department of Expenditure, Ministry of Finance, GoI, OM No. F.No. 6/18/2019/PPD dt. 23.07.2020 & 24.07.2020.

12.0 Any corrigendum, subsequent amendments and / or extension of date, if any, for submission of Bids shall be posted on the portal https://eprocure.gov.in/eprocure/app. Bidder(s) are advised to visit the portal regularly before the deadline for submission of Bids.

13.0 The employer reserves the right to accept or reject any Bid and to cancel the Bidding process and reject all Bids, at any time prior to the award of Contract, without thereby incurring any liability to the affected Bidder or Bidder(s). However, the Bidder(s) who wish to seek reasons for such decision of cancellation/rejection shall be informed of the same by Employer unless its disclosure reasonably could be expected to affect the sovereignty and integrity of India, the security, strategic, scientific or economic interest of the state or lead to incitement of an offence.

14.0 In case of any difference between wordings of English and Hindi, version of 'Notice Inviting Tender', English version shall prevail.

(For & on behalf of NHPC Ltd.)

-sd-

(महाप्रबंधक- विद्युत)
प्रापण एवं संविदा विभाग, सलाल पावर स्टेशन
Email: salal-procurement@nhpc.nic.in

प्रतिलिपि:

1. महाप्रबंधक (तकनीकी), कार्यालय ग्रुप महाप्रबंधक, सलाल पावर स्टेशन, ज्योतिपुरम,सूचनार्थ ।
2. महाप्रबंधक (विद्युत), पावर हाउस विभाग, सलाल पावर स्टेशन, ज्योतिपुरम,सूचनार्थ ।
3. महाप्रबंधक (विद्युत), प्रापण एवं संविदा, सलाल पावर स्टेशन, ज्योतिपुरम, सूचनार्थ ।
4. उप-महाप्रबंधक (सिविल), डैम विभाग, सलाल पावर स्टेशन, ज्योतिपुरम,सूचनार्थ ।
5. उप-महाप्रबंधक (मानव संसाधन) सलाल पावर स्टेशन, ज्योतिपुरम, सूचनार्थ ।
6. उप-महाप्रबंधक (वित्त)सलाल पावर स्टेशन, ज्योतिपुरम, सूचनार्थ ।
7. परियोजना सतर्कता अधिकारी, सलाल पावर स्टेशन, ज्योतिपुरम, सूचनार्थ ।
8. आयकर अधिकारी, धार रोड, उधमपुर सूचनार्थ ।
9. सहायक श्रमायुक्त (Assistant Labour Commissioner)/सैस कलेक्टर "for Building and other constructions Workers Act, 1996" रियासी, जे एंड के, सूचनार्थ ।
10. अपर आयुक्त (Additional Commissioner), कमर्शियल टैक्सेस (Commercial taxes), एक्साइज़ एंड टैक्सेशन (Excise & Taxation) परिसर, रेल हेड, पनामा चौक, जम्मू, सूचनार्थ ।

एनएचपीसी लिमिटेड

(भारत सरकार का एक नवरत्न उद्यम)

NHPC Limited

(A Government of India Navratna Enterprise)

खंड-2

बोलीदाताओं के लिए निर्देश (आईटीबी), बोली लगाने का डेटा और बोलीदाताओं के लिए जानकारी (आईएफबी)

SECTION II

INSTRUCTIONS TO BIDDERS (ITB), BIDDING DATA AND INFORMATION FOR BIDDERS (IFB)

Section II: Bidding Data and Instructions to Bidders

Bidding Data

Instructions to Bidders

Clause		Clause	
	A. General	**16**	Deadline for Submission of Bids
1	Scope of Bid	**17**	Late Bids
2	Eligible Bidders	**18**	Modification and withdrawal of Bids
3	Qualification of the Bidder		**E. Bid Opening and Evaluation**
4	Cost of Bidding	**19**	Bid Opening
5	Site Visit	**20**	Process to be Confidential
	B. Bidding Documents and Evaluation	**21**	Examination of bids and Determination of Responsiveness
6	Content of Bidding Documents	**22**	Evaluation and Comparison of Bids
7	Clarification of Bidding Documents and Pre Bid Meeting	**23**	Preference for Domestic Bidders
8	Amendment to Bidding Documents		**F. Award of Contract**
	C. Preparation of Bids	**24**	Award Criteria
9	Language of Bid	**25**	Employer's Right to Accept any Bid And to Reject any or all Bids
10	Bid Prices	**26**	Notification of Award and Signing of Agreement

11 Currencies of Bid and Payment
12 Bid Validity
13 Earnest Money
14 Alternative Proposals by Bidders

D. Submission of Bids

15 Submission of Bids
27 Performance Security Deposit
28 Advances
29 Corrupt or Fraudulent Practices
30 General

Bidding Data

Sl. No.	Ref. Clause	Description	Particulars
1	1.0 of NIT	कार्य का नाम / **Name of Work:**	**Repair of damaged at TRT area during monsoon 2025 at Salal Power Station, Jyotipuram**
2	2.4 of NIT	स्वतंत्र बाहय मॉनिटर का नाम / **Name of IEM**	~~**Dr. Vinod Aggarwal, IAS (Retd.), Sh. Prabhash Singh, ITS (Retd.) and Shri Upendra Malik CES (Retd.)**~~
3	7.0 of NIT	**Pre-Bid Meeting: Venue, Date & Time**	~~**Venue** ……~~ , **Not Applicable** ~~**Date**: …….~~ ~~**Time** Hours~~
4	12 of ITB	बोली की अपेक्षित वैधता/ **Bid Validity**	120 Days
5	13 of ITB	ईएमडी (बोली प्रतिभूति) **/Earnest Money Deposit:**	**As per NIT**
6	16 of ITB	ऑनलाइन बोली प्रस्तुत करने की अंतिम तारीख व समय **/ Deadline for online Submission of Bids:**	**As per NIT**
7	16 of ITB	ऑफलाइन समर्थन दस्तावेज प्रस्तुत करने की अंतिम तारीख **/ Deadline for offline Submissions of Bids:**	**As per NIT**
8	19 of ITB	तकनीकी बोली खोलने की तारीख व समय **/ Time and Date for opening of Technical Bid/Bids:**	**As per NIT**
9	19 of ITB	मूल्य बोली खोलने की तारीख व समय **/Time and Date of opening Financial Bid/Bids:**	Shall be intimated separately to Bidders who's Bid found to be Technically responsive.
10	26 of ITB	अनुबंध की प्रतियां ठेकेदार द्वारा निःशुल्क प्रदान करने हेतु / **Copies of Agreement to be provided by Contractor free of Charge**	Original- three (two for employer and one for contractor) True copies … ….. Original- three (two for employer and one for contractor) True copies … …..

Section-II

Instructions to Bidders (ITB)

A. *General*

1. Scope of Bid

1.1 The NHPC Ltd. Hereinafter referred to as Employer invites bids for the construction of Works, as described in these documents and referred to as "the Works". The name and identification number of the works is provided in the NIT/Bidding Data

1.2 The successful Bidder will be required to complete the Works in the Time allowed for Completion specified in the **Schedule D/ SCC** in accordance with Conditions of Contract.

1.3 Throughout these documents, the terms "bid" and "tender" and their derivatives (bidder/tenderer, bid/tender, bidding/tendering, etc.) are synonymous.

2. Eligible Bidders

2.1 This Invitation for Bid is open to:

a) The bidders who are incorporated legal entity may only participate in the bidding process if they are legally and financially autonomous and operate under commercial law of their respective jurisdiction.

b) All bidders meeting the Qualification criteria as defined in clause3.

c) Bidder shall be Class-I Local Supplier under Public Procurement (Preference to Make in India), Order-2017 issued by the Department of Promotion of Industry and Internal Trade (DPIIT), Ministry of Commerce and Industry vide No. P-45021/2/2017-PP (BE-II) dated 16.09.2020 or as amended from time to time. Bidders shall submit self- certification that the item offered meets the local content requirement for 'Class-I local supplier in the format provided under Tender Form-11.

Public Procurement (Preferences to Make in India) Policy (including its latest modifications/amendments) as may be prevailing on the date of Price Bid Opening shall be applicable against this tender. Bidders are requested to go through the Public Procurement (Preferences to Make in India) policy available on concerned ministry website.

d) Bidder shall comply with the provisions of "Restrictions under Rule 144(xi) of the General Financial Rules (GFRs) 2017" issued by Department of Expenditure, Ministry of Finance dated 23.07.2020 and subsequent amendments.

2.2 Bidders shall not be under declaration of ineligibility for banning / delisting / blacklisting / debarment from business on the grounds mentioned in para 6 of

Guidelines on Banning of Business dealings (Annexure-A) to Integrity Pact at the time of submitting the bid and shall intimate immediately of any such banning / delisting / blacklisting / debarring after submission of bid till award of tender. Self-Declaration in this regard is to be submitted as per the enclosed proforma (Form-6-, Section-III).

2.3 The Bidders whose contract(s) have been terminated due to unsatisfactory performance by employer in the past, shall not be allowed to participate in the bidding process till completion of the ineligibility period.

~~**2.4** To improve transparency and fairness in the tendering process the Employer is implementing Integrity Pact.~~

~~The Integrity Pact, signed by all the prospective Bidders and the Employer, shall commit the persons/officials of both the parties, not to exercise any corrupt/ fraudulent/collusive/coercive practices in the Tendering process and also during implementation of the Contract. All Applicants shall enter into an Integrity Pact (to be executed on plain paper) with the Employer at the time of submission of their Bids. Only those Bidders who have entered into Integrity Pact with the Employer shall be eligible to participate in the bidding process. Entering into Integrity Pact as per Performa provided in the Section Forms & Procedure is a basic qualifying requirement.~~

~~The Integrity Pact digitally signed / signed on behalf of the Employer is provided as Form-7 Section-III. The Integrity Pact shall be downloaded, printed and signed by the Applicant and to be submitted online.~~

~~Successful bidder shall submit duly executed Integrity pact on Non-Judicial Stamp paper of appropriate value prior to signing of Contract Agreement.~~

~~To oversee the compliance of obligation under the Integrity Pact, _____(*name of IEM given in Bidding data*) has been appointed as Independent External Monitor (IEM) by the Employer. The Contact address of IEM is as under:~~

~~Dr. Vinod Aggarwal, B-103, Sarvodaya Enclave, 2nd Floor, New Delhi-110017 e-mail: arsv50@gmail.com~~	~~Shri Prabhash Singh, E7 M702, Housing Board Colony, Arera Colony, Bhopal, Madhya Pradesh-462016 Email: srgmhrbpl@gmail.com~~	~~Shri Upendra Malik, B-108, NSG Society, Plot-2, Pocket-6, Builders Area, Greater Noida-201315(UP) Email: upendra.malik@gmail.com~~

~~(*Note: Integrity pact to be included /excluded as per threshold limit circulated by NHPC Corporate office.*~~ *The Guidelines for Banning of Business Dealings shall be part of all contracts.*~~)~~

3. Qualification of the Bidder

3.1 All bidders shall include the following information and documents with their bids in, Qualification Information unless otherwise stated in the ITB:

(a) Copies of original documents defining the constitution or legal status, place of registration, and principal place of business; written power of attorney of the signatory of the Bid to commit the Bidder. Additional information as sought in the Form-1 General Information, Section-III shall be provided;

(b) Work experience to demonstrate meeting the criteria stipulated in NIT shall be provided in Form-3 work experiences record, Section-III. Any work experience (not specified in Form-3) claimed afterwards during clarification shall not be considered for evaluation. The work experience shown shall be supported with certificate(s) from the Engineer-in-charge/Project head of the concerned work:

(c) Information on financial criteria stipulated in NIT shall be furnished in Form -4, Annual turnover, Section-III. Copy of affidavit/Certificate of CA mentioning Financial Turnover of last 3 (three) years. Printed Annual reports or financial statements of the Bidder, such as balance sheet, profit and loss statements and auditor's reports as the case may be for the past three years shall be submitted to ascertain bidder's meeting the financial criteria.

~~(d) the proposed methodology ((Schedule- G in separate sheets) and programme of construction (in Schedule- E), backed with equipment planning and deployment (in Schedule-F), duly supported with broad calculations, justifying their capability of execution and completion of the work as per technical specifications and within the stipulated period of completion.~~

~~Note:- Schedule E, F, G can be deleted by projects for small value of works and depending upon the nature of works.~~

3.2 **For Qualification criteria refer** Clause 3.2A to 3.2 F of NIT.

3.3 **Disqualification:**

Even though the bidders meet the above qualifying criteria, they are subject to be disqualified if they have:

(i). Made misleading or false representations in the forms, statements, affidavits, declarations and attachments submitted in proof of the qualification requirements; and/or,

(ii). participated in the previous bidding for the same work & found L-1 and had quoted abnormally high or low bid prices and could not furnish rational justification for it to the Employer,

(iii). The Bidders whose contract(s) have been terminated due to unsatisfactory performance by employer in past, shall not be allowed to participate in the bidding process till completion of the ineligibility period. In such case the bid shall be considered as non-responsive.

4. Cost of Bidding

The Bidder shall bear all costs associated with the preparation and submission of his Bid, and the Employer will, in no case, be responsible or liable for those costs, regardless of the outcome of the Bidding process.

5. Site Visit

5.1 The tenderers, in their own interest, should inspect and examine the site and its surroundings and satisfy themselves, before submitting their tender, in respect of the site conditions including but not restricted to the following which may influence or affect the work or cost thereof under the Contract:

a) Site conditions including access to the site, existing and required roads and other means of transport/communication for use by them in connection with the works;
b) Requirement and availability of land and other facilities for their enabling works, colonies, stores and workshops etc.;
c) Ground conditions including those bearing upon transportation, disposal, handling and storage of materials required for the work or obtained therefrom;
d) Source and extent of availability of suitable materials including water, etc. and labour (skilled and un- skilled), required for work and Laws and Regulations governing their use and employment;
e) Geological, meteorological, topographical and other general features of the site and its surroundings as are pertaining to and needed for the performance of the work;
f) The limit and extent of surface and sub-surface water to be encountered during the performance of the work and the requirement of drainage and pumping;
g) The type of equipment and facilities needed, preliminary to, for and in the performance of the work; and
h) All other information pertaining to and needed for the work including information as to the risks, contingencies and other circumstances which may influence or affect the work or the cost thereof under this contract.

5.2 The tenderers should note that information, if any, in regard to the site and local conditions, in these tender documents, except for the material agreed to be supplied by the Employer, has been given merely to assist the tenderers and is not warranted to be complete.

5.3 The tenderers should note and bear in mind that the Employer shall bear no responsibility for the lack of acquaintance of the site and other conditions or any information relating thereto, on their part. The consequences of the lack of any knowledge, as aforesaid, on the part of the tenderers shall be at their risk and cost and no charges or claims whatsoever consequent upon the lack of any information, knowledge or understanding shall be entertained or payable by the Employer.

~~5.4~~ The Bidders should note and bear in mind that the cost of visiting the site shall be at the Bidder's own expenses. ~~The confirmation of the site visit by the bidder shall be submitted as per Schedule ….. Section …….~~

5.5 Contact detail for site visit and related queries is: Engineer-in-charge: DEPUTY GENERAL MANAGER (CIVIL), Dam Complex, Jyotipuram, Contact# 9435749198.

B. *Bidding Documents and Evaluation*

6. Content of Bidding Documents

6.1 The set of bidding documents comprises the documents listed below and addenda issued in accordance with Clause 8 of ITB.

Section I	Notice Inviting E-Tender
Section II	Instructions to Bidders(ITB), Bidding Data and Information for Bidders(IFB)
Section III	Tender Form, Form of declaration and Qualification Information
Section IV	General Conditions of Contract (GCC) and Schedules
Section V	Forms
Section VI	Special Conditions of Contract (SCC)
Section VII	Schedule of Quantities and Prices
Section VIII	Technical Specifications (TS) and Safety Manual
Section IX	Drawings

6.2 The bidder is expected to examine carefully all instructions, Forms, Schedules of Quantities and Price, qualification information and other schedules, General and Special conditions of contract, specifications, and drawings in the Bid Document. Failure to comply with the requirements of Bid Documents shall be at the bidder's own risk. Pursuant to clause 21 hereof, bids, which are not substantially responsive to the requirements of the Bid Documents, shall be rejected.

7. Clarification of Bidding Documents and Pre-bid Meeting

7.1 A prospective Bidder requiring any clarification of the bidding documents may notify to Tender Inviting Authority in writing or by e-mail at the address indicated in the Bidding Data. The Employer will respond to such requests for clarification which are received 3 days prior to the pre- bid meeting or 10 days from the date of issue of NIT. Any clarification requiring an amendment to the Bidding Documents shall be issued as Addenda as per the Clause 8. Employer's response (including an explanation of the inquiry, but without identifying its source) will be uploaded on portal https://eprocure.gov.in/eprocure/app at least 10 days prior to the deadline for submission of bids, where the bidder can see clarification/reply to query/ amendment to the Bidding Documents, if any**.** The Employer shall not be obliged to respond to any request for clarification received later than the above said period. Further, the mere request for clarification from the bidder(s) shall not be a ground for seeking extension in the deadline for submission of bids.

~~7.2.1 Pre bid conference will be held at venue, date & time mention in NIT/Bidding Data where~~

~~intending bidders may obtain necessary clarifications to their queries, if any, from Employer. All such queries seeking clarification on the bid documents shall be made in writing or by e-mail to Tender Inviting~~

~~Authority at the address indicated in the Bidding Data so as to reach the Employer not later than 3 days before the pre-Bid meeting so that the same can be replied during the meeting.~~

~~7.2.2 The prospective bidder or his authorized representative may attend the pre-bid meeting as indicated above. The purpose of the meeting will be to clarify issues and to answer questions on any matter related to the bid that may be raised at that stage.~~

~~7.2.3 Any modifications in the Tender documents listed in Clause 6.1 of ITB, which may become necessary as a result of the pre-bid meeting shall be made by the Employer exclusively through the issue of an Addendum pursuant to Clause 8 of ITB.~~

~~7.2.4 Non-attendance at the pre-bid meeting will not be a cause for disqualification of a bidder.~~

8. Amendment to Bidding Documents

8.1 Before the deadline for submission of bids, the Employer may for any reason, whether at its own initiative or in response to a clarification requested by a prospective Bidder, modify the bidding documents by issuing addenda.

8.2 In case the Schedule of Quantities and Price (Schedule–A) is revised through corrigendum/addendum, in such a case submission of revised financial bid will become mandatory, and the financial bid submitted earlier (i.e before corrigendum) will become invalid.

8.3 Any addendum/corrigenda issued prior to submission of bids would be put up on the CPP portal https://eprocure.gov.in/eprocure/appas well as NHPC website www.nhpcindia.com. Any addenda/corrigenda/clarifications thus issued shall be part of the bidding documents. The prospective bidders have to check aforesaid portal for any amendment/corrigenda/clarifications periodically and before submission of their bids. All prospective bidders are presumed to have examined all amendments/corrigenda/clarifications published on the website and have submitted their bids accordingly.

8.4 To give prospective bidders reasonable time in which to take an addendum into account in preparing their bids, the Employer shall extend, as necessary, the deadline for submission of bids, in accordance with Clause 16 of ITB.

C. Preparation of Bids

9. Language of Bid

All documents relating to the Bid shall be in English language.

10. Bid Prices

10.1 The Contract shall be for the whole Works, as described in Clause 1.1 of ITB, based on the Schedule of Quantities and Prices submitted by the Bidder.

10.2 The Bidder shall adopt the ~~Item rate method or~~ Percentage Rate Method for Price Bids as specified in Schedule D.

~~**Item rate method** requires the bidder to quote rates and prices for all items of the Works described in the Schedule of Quantities and Prices. The item for which no rate or price or zero is entered by the Bidder will not be paid for by the Employer when executed and shall be deemed covered by the other rates and prices in the Schedule of Quantities and Prices.~~

Percentage Rate Method requires the bidder to quote a percentage above / below / at par of the rates specified in the Schedule of Quantities and Prices prepared on the basis of Project Schedule of Rates.

10.3 All duties, taxes, royalties and other levies payable by the Contractor under the Contract, or for any other cause, as applicable 28 days prior to deadline for submission of Bid, shall be included in the rates, prices, and total Bid price submitted by the Bidder. All applicable taxes / duties including GST as applicable and assessed 28 days prior to bid submission date on the Employer shall also be included in the final bid prices, which shall be deducted from the Contractor and deposited to the concerned authority by the Employer. Employer will not entertain any claim whatsoever on this account.

All the bidders should ensure that they are GST compliant and their quoted tax structure /rates are as per GST Law. As per the GST Act the bid must show the GST Tax Rates and GST Amount explicitly. The bidder has to declare the applicable/considered GST Tax structure in 'Letter of Tender Form' (Form-2)

GST has been implemented by the Government w.e.f. 01.07.2017. The Contractor, except for the supplies for the categories mentioned at Section 9(3) of GST Act, shall submit GSTIN and shall quote his prices in accordance with GST provisions after considering the benefit of Input Tax Credit etc**.**

~~**10.4** The rates and prices quoted by the Bidder shall be subject to price adjustment as per the formula provided in the clause 46 of General Conditions of Contract.~~

11. Currencies of Bid

The rates and the prices shall be quoted by the bidder entirely in Indian Rupees.

12. Bid Validity

12.1 Bids shall remain valid for a period as mention in NIT/Bidding data, after the deadline date for online bid submission specified in Clause 16 of ITB or amendment thereof***.***

12.2 In exceptional circumstances, prior to expiry of the original time limit, the Employer may request the bidders to extend the period of validity for a specified additional period. The request and the bidders' response shall be made in writing or by e-mail. A bidder may refuse the request without forfeiting his Earnest Money. A bidder agreeing to the request will not be required or permitted to modify his bid, but will be required to extend the validity of his earnest money for a period of the extension, and in compliance with Clause 14 of ITB in all respects.

13. Earnest Money Deposit (EMD)

13.1 The Bidder shall furnish, as part of the Bid, Earnest Money, for the amount specified in the NIT/Bidding data either in the form of Demand draft in favor of 'NHPC Ltd' payable at place mentioned in NIT/Bidding data or irrevocable Bank Guarantee valid for a period of 90 days beyond the validity period of the bid issued by any Indian Nationalized Bank/Scheduled Commercial Bank in the prescribed format (Forms of Bank Guarantees) or irrevocable Insurance Surety Bond valid for a period of 90 days beyond the validity period of the bid issued by any Indian Insurance Company registered under Insurance Act 1938 or as amended from time to time and approved by the Insurance Regulatory Development Authority of India (IRDAI) in the prescribed format (Form of Insurance Surety Bond). Earnest Money if submitted by the Bidder in the form of Bank Guarantee / Insurance Surety Bond, the original Bank Guarantee / Insurance Surety Bond shall be submitted along with the bid. However, the issuing Bank / Insurance Company shall submit an unstamped duplicate copy of Bank Guarantees / Insurance Surety Bond directly by registered post (A.D.) to the Employer (authority inviting tenders) with a forwarding letter.

However, in case Earnest Money has been submitted by the bidder in the form of Demand draft, the information relating to particulars of the bidder's bank shall be submitted by the bidder along with the bid in the ECS Form at Section-V. The Earnest Money of unsuccessful bidders shall be remitted by the Employer in the above account through ECS mode, the Earnest Money submitted in the shape of Bank Guarantee / Insurance Surety Bond shall be returned in original by speed post.

13.2 Any bid not accompanied by an acceptable Earnest Money shall be rejected by the Employer as non-responsive. However, the bidders recognized as **startup for the works covered under the tender** by the Department of Industrial Policy & Promotion (DIPP) are exempted from furnishing the Bid Security /Earnest Money Deposit, such bidders shall require to submit notarized copy of valid certificate of recognition for the works covered under the tender issued by the DIPP.

13.3 The Earnest Money of bidders who are not qualified for opening of price bid shall be returned within 15 days after such notification. The Earnest Money of unsuccessful bidders will be returned within 15 days of opening of price bids.

13.4 The Earnest Money of the successful Bidder will be discharged when the Bidder has signed the Agreement and furnished the required Performance Security Deposit.

13.5 The Earnest Money may be forfeited:

a) if the Bidder withdraw or modify/revise the bid in the interval between the Bid submission deadline and the expiration of the Bid validity period; or

b) if the Bidder adopts corrupt or fraudulent or collusive or coercive practice(s) or defaults under Integrity Pact: or

c) in the case of a successful Bidder, if the Bidder fails within the specified time limit to

   i. sign the Agreement; and/or

   ii. Furnish the required Performance Security Deposit.

13.6 Interest or any other charges, whatsoever, will not be payable by the Employer on the Earnest Money Deposit.

13.7 Bidder shall communicate the following bank details of NHPC LTD to the issuing Bank for online confirmation of Bank Guarantee to be submitted in terms of this clause:
Name of beneficiary: NHPC LTD
ACCOUNT No- 11391767764
IFSC Code: SBIN0003704
Address of Bank: State Bank of India, Jyotipuram, Reasi (J&K).

Bidder is required to submit the SFMS receipt issued by the bank along with its bid for BG Confirmation.

14. Alternative Proposals by Bidders

~~Bidder(s) shall submit offers that comply with the requirements of the bidding documents, including the Schedule of Quantities and Price, and the basic technical design as indicated in the drawings and specifications. Further, failure to furnish all information required by the Bid Document or submission of incomplete offers, conditional Bid and proposals containing deviations from the Bid Document shall be rejected as non-responsive.~~

D. Submission of Bids

15. Submission of Bids

The Bid shall be prepared and submitted in two parts as stated hereunder. Submission of the bids by any other means shall not be accepted by the Employer in any circumstances. ~~In case of Pre-bid meeting to be held as per clause 7.0 of ITB, the start date of submission of bids and the deadline for submission of bids is indicated in Bidding Data/NIT.~~

The bidder shall ensure that all uploaded documents/ offline documents of bid shall be duly signed along with seal of the authorized person of the bidder having valid power of attorney.

15.1 Online Submission:

15.1.1 Cover –I: This shall be named "Technical Bid". No bid price related information shall be mentioned in the Technical Bid. Techno-commercial Bid shall comprise;

i). Dully filed Letter of Tender (Form- 2) (without indicating the quoted price)

ii). Scanned copy of DD towards cost of Tender fee in favor of "NHPC Ltd." payable at SBI, Jyotipuram.

iii). Scanned copy of DD/Bank Guarantee / Insurance Surety Bond towards Earnest Money Deposit (EMD) / notarized copy of valid registration certificate from DIPP Certificate **as per ITB Clause 13.**

iv). Duly filled General Information (Form-1), and Scanned copies of original documents defining the constitution or legal status, Memorandum of Understanding/ Articles of Association, place of registration, and principal place of business; notarized power of attorney of the signatory of the Bid to commit the Bidder with authority of the executant to execute the same;

v). Duly filled Form of Declaration (Form-5)

vi). Duly filled Declaration of Ineligibility Form6)

vii). Scanned copy of PAN No.

viii). Scanned copy of GST Registration No.

ix). Scanned copy of EPF Registration No. & ESIC Registration No. (as applicable)***.***

x). Detail(s) of Work Experience (Duly filled in Form -3) supported with scanned copies of documentary evidence.

xi). Scanned copies of Annual turnover in (Duly filled in Form–4) (Copy of affidavit/Certificate of CA mentioning Annual turnover of last 3 (three) years, Printed Annual reports or financial statements of the Bidder, such as balance sheet, profit and loss statements and auditor's reports as the case may be for the past three years.)

~~xii). The proposed methodology (in separate sheets), Schedule F & G.~~

~~xiii). Scanned copy of duly signed Integrity Pact as per Clause 2.4 of ITB (If applicable)~~

xiv). Form-11, Certificate of Local Content in accordance to Public Procurement (Preference to Make in India) Order 2017

xv). Form-12, Declaration on Compliance under Rule 144 (xi) of GFR-2017

xvi). Such other certificates/documents as defined in the ITB.

15.1.2 Cover-II: It shall be named "Financial Bid or Price Bid" and shall comprise of Schedule of Quantities and Prices (Schedule A).

Financial Bid shall be submitted in Electronic Form on the portal by the date & time as specified in NIT. Submission of the "Financial Bid" by any other means shall not be accepted by the Employer in any circumstances. In case, if any cell is left blank and no rate is quoted against any of the item(s) by the bidder, rate of such item(s) shall be treated as"0" (Zero) and considered included in the cost of the Bid and no separate claim whatsoever will be entertained on this account.

15.1.3 Submission of revised financial bid will be mandatory, in case the same is desired by Employer through corrigendum/addenda. In such a case the financial bid submitted earlier will become invalid.

15.2 Offline Submission:

Bidder shall be submitting the hard copy(ies) of documents as mention at sub para 15.2.1 in (one) sealed envelope, which must be either delivered by hand or by registered mail, and submitted by the date and time as specified in NIT/Bidding data. The envelope received late or after the prescribed due date and time will not be entertained. NHPC will not be responsible for any postal delay.

15.2.1 The sealed Envelope containing hard copy of documents shall be marked as "Hard copy(ies) of documents" for "Repair of damaged at TRT area during monsoon 2025 at Salal Power Station, Jyotipuram":

i). Cost of Tender Documents (in original) of Rs (as specified in NIT/Bidding Data).

ii). Demand draft/BG / Insurance Surety Bond (in original) towards Earnest Money Deposit of Rs.--------(as specified in Bidding Data/NIT).

iii). Power of Attorney along with a copy of the Board resolution. In case of a General

Power of Attorney, a true copy of the POA shall be duly notarized by Notary and in case of a specific Power of Attorney, the original POA. If a proprietary firm is bidding and proprietor of the firm is signing the bid, notarized copy of ownership of firm shall be submitted.

iv). Such other certificates/documents as defined in the ITB.

15.3 The bid submitted shall become invalid If any discrepancy is noticed between the documents as uploaded at the time of submission of bid (clause 15.1.1) and hard copies as submitted physically to the Tender Inviting Authority (clause 15.2.1).

16. Deadline for Submission of Bids

16.1 Complete Bids must be uploaded at the portal, and hard copy (ies) of the document as mentioned in Clause 15.2 of ITB must be submitted at the address specified, by the date and time as stipulated in the Bidding Data/NIT.

In the event of the specified date for the submission of bids being declared a holiday for the NHPC Ltd., the hard copy (ies) of the documents will be received up to the specified time on the next working day. However, the date and time for online submission of the Bids shall continue to be the date and time specified in the Bidding Data/NIT or any amendment for the same.

16.2 The Employer may, in the exceptional circumstances and at its discretion, extend the deadline for submission of bids by issuing an amendment in accordance with Clause 8 of ITB, in which case all rights and obligations of the Employer and the bidders previously subject to the original deadline will then be subject to the new deadline.

16.3 E-procurement portal permits only one person having Digital Signature Certificate (DSC) and registration etc. at the portal. It will have deemed that the legally authorized signatories of the Bidder having DSC has carried out bidding process through portal.

16.4 Any alteration/ modification in the Bid or additional information supplied subsequently to the Bid after period of bid submission, unless the same has been expressly sought for by the Employer, shall be disregarded.

17.0 Late Bids

Online submission of the bid will not be permitted on the portal after expiry of submission time and the bidder shall not be permitted to submit the same by any other mode. Similarly, hard copies of the Off line documents, if received by the Employer after the deadline for submission of Bids prescribed in Bidding Data/NIT, then it will be considered as 'Late Bid' notwithstanding the fact that the bidder has uploaded the bid online within the stipulated deadline. In such a case, the uploaded online bid on the portal shall be considered as non-responsive and shall not be processed further.

18.0 Modification and Withdrawal of Bid

18.1 After submission of the bid the contractor can re-submit revised bid any number of times but before stipulated deadline for submission of bid.

18.2 In case Employer desired through amendment/corrigendum to submit revised financial

bid then it shall be mandatory to submit revised financial bid. In such case the bid submitted before amendment/corrigendum shall become invalid.

18.3 The server time (which is displayed on the bidders' dashboard) will be considered as the standard time for referencing the deadlines for submission of the bids by the bidders, opening of bids etc. The bidders should follow this time during bid submission.

18.4 No Bid shall be withdrawn or modified/revised after Bid submission deadline. Withdrawal or modification of a Bid after Bid Submission deadline will result in the Bidder's forfeiture of its Bid security and further their Bid shall be considered non-responsive.

E. *Bid Opening and Evaluation*

19. Bid Opening

19.1 The Employer/ Authority inviting Tender will open the bids received (except those received late) in the presence of the bidder's / bidder's representatives who choose to attend at the time, date and place specified in the Bidding Data/NIT. The Bidders/ Bidder's representatives who are present shall sign a register evidencing their attendance. Bidder(s) can also view Bid opening online on the CPP portal https://eprocure.gov.in/eprocure/app at their end.

In the event of the specified date for the opening of bids being declared a holiday for the Employer, the Bids will be opened at the appointed time and location on the next working day.

19.2 Online Cover-I i. e Technical Bids shall be opened first.

19.3 Cover-I i. e Technical Bids shall be evaluated for establishing eligibility of the bidder as per clause 2 & 3 as well as techno-commercially responsiveness as per Clause 21 of ITB, and a list will be drawn up of the responsive bids whose financial bids are eligible for consideration.

19.4 The Cover-II i.e. Financial Bid of only of those Bidder(s), who are found to be meeting the eligibility criteria as well as techno-commercially responsive for the subject Works shall be opened thereafter. The date of opening of the Financial Bid shall be notified separately to all the eligible & techno-commercial responsive Bidder. The Financial Bid shall be opened online in presence of Bidder's representatives who wish to be present at the notified time and place. Bidder(s) can also view Bid opening online on the CPP portal https://eprocure.gov.in/eprocure/app at their end.

19.5 The Financial Bids of Bidder(s), who are not considered eligible and techno commercial responsive, shall not be opened and will be archived' unopened. The decision of the Employer will be final and binding in this regard.

19.6 The Employer/Tender inviting Authority at his discretion may open Technical and Financial Bid simultaneously and evaluate the Bid completely.

20. Process to be Confidential

Information relating to the examination, clarification, evaluation, and comparison of bids and recommendations for the award of a contract shall not be disclosed to bidder(s) or any other

persons not officially concerned with such process until the award to the successful Bidder has been announced. Any attempt by a Bidder to influence the Employer's processing of bids or award decisions may result in the rejection of his Bid.

21. Examination of Bids and Determination of Responsiveness

21.1 During the detailed evaluation of "Technical Bids", the Employer will determine whether each Bid:

(a) meets the eligibility criteria defined in Clauses 2 and 3;

(b) has been properly signed;

(c) is accompanied by the required securities; and

(d) Is substantially responsive to the requirements of the bidding documents. During the detailed evaluation of the "Financial Bids", the resf the bids will be further determined with respect to the remaining bid conditions, i.e., priced Schedule of Quantities and Prices, Technical Specifications and Drawings.

21.2 A substantially responsive "Bid" is one which conforms to all the terms, conditions, and specifications of the bidding documents, without material deviation or reservation. A material deviation or reservation is one:

(a) which affects in any substantial way the scope, quality, or performance of the Works;

(b) which limits in any substantial way, the Employer's rights or the Bidder's obligations under the Contract; or

(c) whose rectification would affect unfairly the competitive position of other bidders presenting substantially responsive bids or

(d) which is inconsistent with the bidding documents.

21.3 If a "Bid" is not substantially responsive, it will be rejected by the Employer, and may not subsequently be made responsive by correction or withdrawal of the nonconforming deviation or reservation.

21.4 During techno-commercial Bid evaluation, the Employer may, at its discretion, ask any Bidder for a clarification of its Bid. The request for clarification and response shall be in writing or e-mail or through the portal, however, no change in the price or substance of the Bid shall be sought, offered or permitted. Reply shall be submitted by Bidder within a stated reasonable period of time. If Bidder does not provide clarifications of the information requested by the date and time set in the Employer's request for clarification, its Bids may be rejected.

22. Evaluation and Comparison of Bids

22.1 The Employer will evaluate and compare the Cover II i.e Financial Bid of bidders whose bids are determined to be substantially techno-commercially responsive in accordance with Clause 21 of ITB.

22.2 In case bids are invited on ~~Item Rate Method~~ Percentage rate method and if the bid of the

successful bidder is ~~front loaded (i.e. the items which are to be executed in earlier part of construction period, are quoted high or bid with low rated items to be executed in the later part of contract period)~~ abnormally low rated bid in relation to the Engineer's estimate of the cost of work to be performed under the contract, the Employer may require that the amount of the performance security set forth in Clause 27 of ITB be increased to a level sufficient to protect the Employer against financial loss in the event of default of the successful Bidder under the Contract. The amount of the increased performance security shall be decided at the sole discretion of the Employer, which shall be final, binding and conclusive on the bidder.

The Bank Guarantee / Insurance Surety Bond for the additional performance security shall be valid up to completion of work under the scope of the contract.

To assist in the examination, evaluation, and comparison of bids, the Employer may, at its discretion, ask any bidder for clarification of its Bid, including breakdowns of unit rates. The request for clarification and the response shall be through letter/e-mail but no change in the price or substance of the bid shall be sought, offered, or permitted except as required to confirm the correction of arithmetical errors discovered by the Employer in the evaluation of the Bids in accordance with Sub- Clause 21.4 of ITB.

~~22.3 e-Reverse Auction (e-RA) (if applicable)~~

~~22.3.1 e-RA shall be followed after e-tender only if number of eligible bidders at price bid stage are at least 2 (two). Following Procedure shall be followed for e-RA:~~

~~a. If the discovered price is upto 105% of the estimated cost, no e-RA will be conducted.~~

~~b. If the discovered price is above the price mentioned in (a) above, then following procedure of e-RA shall be followed:~~

- ~~In case the number of eligible Bidders is 3 or less than 3, then e-RA shall be conducted among all the bidders.~~
- ~~In case the number of eligible Bidders are 4, then e-RA shall be conducted among the bidders except H1.~~
- ~~In case the number of eligible Bidders are more than 4, then the bidders quoting higher rates shall be eliminated as per below formula, and e-RA shall be conducted among the remaining bidders:~~
  ~~Numbers of eliminated bidders = (n-3) x 0.5 where n = total bidders~~
  ~~(In case "Numbers of eliminated bidders" is a fraction, it shall be rounded off to lower whole number.)~~

~~22.3.2 In case of e-Reverse Auction, the procedure of e-RA shall be as hereunder:-~~

~~i) Conditions of conducting e-RA after e-tendering (enclosed as Appendix-I)~~
~~ii) Business Rule for e-RA (enclosed as Appendix-II)~~
~~iii) Process Compliance form (enclosed as Appendix-III)~~
~~iv) Price Confirmation form for e-RA (enclosed as Appendix-IV)~~

23.1 Public Procurement (Preference to Make in India), Order 2017:

Bidder shall be Class-I Local Supplier under Public Procurement (Preference to Make in India), Order-2017 issued by the Department of Promotion of Industry and Internal Trade (DPIIT), Ministry of Commerce and Industry vide No. P-45021/2/2017-PP (BE-II) dated 16.09.2020 or as amended from time to time.

Definition of Make in India:

A) Definitions

Local content: means the amount of value added in India which shall, unless otherwise prescribed by the Nodal Ministry, be the total value of the item procured (excluding net domestic indirect taxes) minus the value of imported content in the item (including all custom duties) as a proportion of the total value, in percent.

Class-I local supplier: means a supplier or service provider, whose Goods/ Services /Works offered for procurement, meets the minimum local content as prescribed for "Class-I local supplier" under this order.

For procurement of Goods / Services / Works, irrespective of purchase value where there is sufficient local capacity and local competition, only Class-I local supplier shall be eligible to bid.

Minimum local content: Nodal ministry/department may prescribe only a higher percentage of minimum local content requirement to categorize a supplier as Class-I local supplier / Class-II local supplier / Non local supplier. For the items, for which Nodal ministry/department has not prescribed higher minimum local content notification under the order, it shall be 50% and 20% for Class-I local supplier / Class-II local supplier respectively.

B) Verification of local content:

a) The 'Class-I local supplier' at the time of tender, bidding or solicitation shall be required to indicate percentage of local content and provide self-certification that the item offered meets the local content requirement for 'Class-I local supplier'. They shall also give details of the location(s) at which the local value addition is made.

b) In cases of procurement for a value in excess of INR 10.00 Crores, the 'Class-I local supplier'/ 'Class-II local supplier' shall be required to provide a certificate from the statutory auditor or cost auditor of the company (in the case of companies) or from a practicing cost accountant or practicing chartered accountant (in respect of suppliers other than companies) giving the percentage of local content.

c) False declarations will be in breach of the Code of Integrity under Rule 175(1)(i)(h) of the General Financial Rules for which a bidder or its successors can be debarred for up to two years as per Rule 151(iii) of the General Financial Rules along with such other actions as may be permissible under law. A supplier who has been debarred by any procuring entity for violation of this Order shall not be eligible for preference under this Order for procurement by any other procuring entity for the duration of the debarment. The debarment for such other procuring entities shall take effect prospectively from the date on which it comes to the notice of other

procurement entities.

23.2 Restrictions under Rule 144(xi) of the General Financial Rules (GFRs) 2017:

i. Any Bidder from a country which shares a land border with India will be eligible to bid in this tender only if bidder is registered with the Competent Authority {i.e Registration Committee constituted by the Department of Promotion of Industry and Internal Trade(DPIIT), Govt. of India}. However, the said requirement of registration will not apply to bidders/sub-contractors from those countries (even if sharing a land border with India) to which the Government of India has extended lines of credit or in which the Government of India is engaged in development projects. Bidders may apprise themselves of the updated lists of such countries available in the website of the Ministry of External Affairs (23.07.2020, order (PP no.2).

ii. Such registration should be valid for the entire period of bid validity or any extension thereof. However, in case the validity period of registration is less than bid validity period, the Bidder shall be required to submit the extension of the validity period of registration before the opening of price bids. (point 13, 23.07.2020, Order (PP no.1)

iii. Further the successful bidder shall not be allowed to sub-contract works to any "Subcontractor" from a country which shares a land border with India unless such Subcontractor is registered with the competent Authority {Registration Committee constituted by the Dept of Promotion of Industry and Internal Trade (DPIIT), Govt. of India}. (point 11, 23.07.2020, Order (PP no.1)

iv. A bidder is permitted to procure raw material, components, sub-assemblies, etc. from the vendors of countries sharing a land border with India without getting registered with the Competent Authority, i.e. Registration Committee constituted by DPIIT, as it is not regarded as "sub-contracting" (circular 12.03.2021)

v. However, in case a bidder proposes to supply finished goods procured directly/indirectly from the vendors of the countries sharing land border with India, such vendors will be required to get registered with the Competent Authority, i.e. Registration Committee constituted by DPIIT. circular 12.03.2021)

vi. Bidders have to submit certificate in accordance with Application **Form 12** (as per applicability). If such certificate given by a bidder whose bid is accepted is found to be false, this would be a ground for termination and further legal action in accordance with law.

vii. "Bidder" for the purpose of above referred order (including the term 'tenderer', 'consultant', 'vendor' or 'service provider' in certain contexts) means any person or firm or company, including any member of a consortium or joint venture (that is an association of several persons, or firms or companies) , every artificial juridical person not falling in any of the descriptions of bidders stated hereinbefore, including any agency, branch or office controlled by such person, participating in a procurement process.

viii. Bidders from a country which shares a land border with India" mentioned in para above means; (point 8, 23.07.2020, Order (PP no.1):

   a. An entity incorporated, established or registered in such a country; or

b. A subsidiary of an entity incorporated, established or registered in such a country; or

c. An entity substantially controlled through entities incorporated, established or registered in such a country; or

d. An entity whose beneficial owner is situated in such a country; or

e. An Indian (or other) agent of such an entity; or

f. A natural person who is a citizen of such a country; or

g. A consortium or joint venture where any member of the consortium or joint venture falls under any of the above.

ix. The bidder shall comply with all the term and condition of the OM issued by the Department of Expenditure, Ministry of Finance, Govt. of India vide F. No 6/18/2019-PPD dated 23.07.2020 & 24.07.2020 read with its amendments thereof.

F. *Award of Contract*

24. Award Criteria

Subject to Clause 26 of ITB, the Employer will award the Contract to the Bidder who has offered the lowest evaluated Bid price after e tendering and / ~~or e-Reverse Auction~~ (as the case may be), provided that such Bidder has been determined to be (a) eligible in accordance with the provisions of Clause 2 & 3 of ITB; (b) determined substantive responsive and (c) who has offered the lowest Evaluated Bid Price pursuant to Clause 22.

25. Employer's Right to accept any Bid or Reject any or all Bids

Notwithstanding Clause 24 above, the Employer reserves the right to accept or reject any bid, and to cancel the bidding process and reject all bids, at any time prior to the award of Contract, without thereby incurring any liability to the affected bidder or bidders However, the Bidder(s) who wish to seek reasons for such decision of cancellation/ rejection shall be informed of the same by Employer unless its disclosure reasonably could be expected to affect the sovereignty and integrity of India, the security, strategic, scientific or economic interest of the state or lead to incitement of an offence.

26. Notification of Award and Signing of Agreement.

26.1 The bidder whose bid has been accepted will be notified of the award by the Employer prior to expiration of the Bid validity period through the "Letter of Acceptance", which will state the sum that the Employer will pay to the Contractor in consideration of the execution, completion by the Contractor as prescribed by the Contract.

26.2. The notification of award will constitute the formation of the Contract until the Formal Agreement is signed pursuant to clause 26.3 of ITB and further subject only to the furnishing of a performance security deposit in accordance with the provisions of Clause 27 of ITB. Within 28 days of date of issue of Letter of Acceptance, Contract Agreement shall be drawn with the successful bidder on prescribed Form.

26.3. The Agreement will incorporate all agreements between the Employer and the successful bidder. It will be signed by the Employer and the successful bidder after the performance

security deposit is furnished. Till signing of Contract Agreement between the Employer and successful bidder, provision under Clause 55.2 'Arbitration' of GCC shall not be applicable.

26.4 The Contract shall be signed in three originals (two for employer and one for contractor). The language of the contract shall be English.

26.5 The Contractor shall furnish free of charge nos. of true copies of the Contract to the Employer as mentioned in Bidding Data.

27. Performance Security Deposit

27.1 Within 28 (twenty-eight) days after issue of the Letter of Acceptance, the successful bidder shall deliver to the Employer Performance Security in accordance with ~~Clause 3 of General Conditions of Contract~~ Clause 16 of SCC valid till 90 days beyond the end of Defect Liability Period. Additional performance security shall also required to be given for abnormally low rated bid ~~for front loaded bid or bid with low rated items to be executed in the later part of contract period~~ ~~as per clause-3 of GCC~~ as per Clause 16 & 17 of SCC which shall be valid till the time of completion of works. The performance security shall not be released till liquidated damages, if any, is pending for recovery. If the contractor does not submit the performance security within the stipulated period due to any valid reason, Tender Inviting Authority may grant time extension for submission of performance security based on the request of contractor.

In case, the contractor does not submit performance security without a valid reason, the Employer shall impose simple interest @12% per annum on the full amount of applicable performance security (along with applicable taxes, if any) for the period of delay in submission of performance security. The interest on delayed period shall be calculated on pro rata basis for number of delayed days.

The interest accrued shall be payable by the Contractor within 14 days from the date of intimation by Tender Inviting Authority in form of Bank Demand Draft/ Banker Cheque in favor of '**NHPC Ltd'**, otherwise the same shall be recovered from any payment due or become due against bills / any other amount lying with NHPC.

The delayed submission of Performance Security by the Contractor shall be recorded in substantial completion and final completion certificates. Further, no claim for extension of time for completion period or any other type of claim on account of delayed submission of performance security shall be entertained.

27.2 If contractor fails to submit the Performance Security within 45 days (for the contracts having time for completion - up to 12 months) or 60-days (for the contracts having time for completion - more than 12 months) from the date of issue of Letter of Award (LOA), then following actions shall be taken against such Contractor:

i) Award shall summarily be terminated
ii) EMD/ Bid security shall be forfeited.
iii) The bidder shall be debarred / banned to participate in the business dealings with NHPC for a period of one year.
iv) The name of the Contractor shall be hosted on the NHPC website etc. as per existing norms of NHPC / Govt. of India.
v) Such defaulted contractor shall not be eligible to participate in the bidding process

of re- tender of this work.

27.3 Bidder shall communicate the following bank details of NHPC Ltd. to the issuing Bank for online confirmation of Bank Guarantee to be submitted in terms of this Clause:

Name of beneficiary: NHPC LTD
ACCOUNT No- 11391767764
IFSC Code: SBIN0003704
Address of Bank: State Bank of India, Jyotipuram, Reasi (J&K).

Bidder is required to submit the SFMS receipt issued by the bank along with its bid for BG Confirmation.

~~**28. Advances**~~

~~The Employer will provide Mobilization Advance and Advance for procurement of new equipment as provided in General Conditions of Contract.~~

29 Corrupt or Fraudulent or Collusive or Coercive Practices

29.1 The Employer requires the bidders/contractors under this contract observe the highest standard of ethics during the procurement and execution of this contract. In pursuance of this policy, the Employer:

(a) defines, for the purpose of these provisions, the terms set forth below as follows:

(i) **"corrupt practice"** means the offering, giving, receiving or soliciting of anything of value to influence the action of a public official in the procurement process or in contract execution; and

(ii) **"fraudulent practice"** means a misrepresentation of facts in order to influence a procurement process or the execution of a contract to be detriment of the Employer, and includes collusive practice among Bidders (prior to or after bid submission) designed to establish bid prices at artificial non-competitive levels and to deprive the Employer of the benefits of free and open competition.

(iii) **"collusive practices**" means a scheme or arrangement between two or more Bidders with or without the knowledge of the Borrower, designed to establish Bid prices at artificial, non- competitive levels;

(iv) **"coercive practice"** means harming or threatening to harm, directly or indirectly, persons or their property to influence their participation in a procurement process, or affect the execution of a contract.

(v) **"Integrity Pact"** means an agreement signed between the Contractor and the Employer committing the persons/officials of both the parties, not to exercise any corrupt influence on any aspect of the Tender/Contract.

(b) An agreement called Integrity Pact between the prospective Bidders and the Employer shall be signed committing the persons/officials of both the parties, not to exercise any corrupt influence on any aspect of the Tender/Contract. The Independent External Monitor(s) (IEM) appointed by the Employer shall oversee the compliance of obligation under the Integrity Pact.

(c) A Bid may be rejected by the Employer if it is determined at any stage that the respective Bidder has engaged in corrupt or fraudulent or collusive or coercive practices or defaulted commitments under Integrity Pact in competing for or in executing the contract in question and his Bid Security shall be forfeited. The Contractor shall not be entitled for any compensation whatsoever under this clause.

(d) The Employer will declare a Bidder ineligible for a stated period of time to award a contract/contracts as per Guidelines on Banning of Business Dealings if he at any time determines that the Bidder has engaged in corrupt or fraudulent or collusive or coercive practices in competing for, or in executing, the contract.

(e) The documents/information submitted by Contractor may be verified by the officials of the Employer for its authenticity at any time and the Contractor shall provide all facilities/co- operation in this regard. If it is found that any of the documents/information submitted by the Contractor is not genuine, the Employer shall have full rights to cancel his Bid, forfeit the bid security and terminate the Contract, if awarded.

30.0 PERMANENT ACCOUNT NUMBER (PAN) AND GSTIN

The Bidder shall furnish to the Employer his Permanent Account Number issued by the Income Tax Authorities in India and Goods and Services Tax Identification number issued by the concerned Authorities in India. No payment shall be made to the Contractor unless he submits his Permanent Account Number (PAN) and Goods and Services Tax Identification number (GSTIN).

31.0 General

No Engineer of Gazetted Rank or other Gazetted Officer employed in Engineering or Administrative duties in an Engineering Department of the Government of India is allowed to work as a contractor/contractor's employee for a period of one year after his retirement from Government service, without the prior permission of the Government of India in writing. The bid shall become invalid and/or contract is liable to be cancelled if either the contractor or any of his employees is found any time to be such a person who had not obtained the permission of the Government of India as aforesaid before submission of the bid or engagement in the contractor's service.

Bidder shall also intimate the names of persons who are working with him in any capacity who are near relatives to any official of the Employer. Any breach of this condition by the bidder/contractor would render him liable to be removed from this contract. An undertaking in this regard shall be submitted by the bidder in its letter head as per format placed at **Form-9.**

32.0 EMD

Any liability of GST arising out of forfeiture of EMD shall be borne by the Contractor.

E- TENDERING INFORMATIONS

REGISTRATION:

(i) Bidders are required to enroll on the e-Procurement module of the Central Public Procurement Portal by using the "Online Bidder Enrollment" option available on the home page. **Enrolment on the CPP Portal is free of charge.**

(ii) During enrolment/ registration, the bidders should provide the correct/ true information including valid email-id & mobile no. All the correspondence shall be made directly with the contractors/ bidders through email-id provided.

(iii) As part of the enrolment process, the bidders will be required to choose a unique username and assign a password for their accounts.

(iv) For e-tendering possession of valid Digital Signature Certificate (Class II or Class III Certificates with signing key usage) is mandatory which can be obtained from SIFY/ n-Code/e-Mudra or any Certifying Authority recognized by CCA India on e-Token/ Smart-Card.

(v) Upon enrolment on CPP Portal for e-tendering, the bidders shall register their valid Digital Signature Certificate with their profile.

(vi) Only one valid DSC should be registered by a bidder. Bidders are responsible to ensure that they do not lend their DSCs to others which may lead to misuse and should ensure safety of the same.

(vii) Bidders can than log into the site through the secured login by entering their user ID/ password and the password of the DSC/ eToken.

Searching for Tender documents:

a) There are various search options built in the CPP Portal, to facilitate bidders to search active tenders by several parameters. These parameters could include Tender ID, Organization Name, Location, Date, Value, etc. There is also an option of advanced search for tenders, wherein the bidders may combine a number of search parameters such as Organization Name, Form of Contract, Location, Date, Other keywords etc. to search for a tender published on the CPP Portal.

b) Once the bidders have selected the tenders they are interested in, they may download the required documents/ tender schedules. These tenders can be moved to the respective 'My Tenders' folder. This would enable the CPP Portal to intimate the bidders through SMS/ e-mail in case there is any corrigendum issued to the tender document.

c) The bidder should make a note of the unique Tender ID assigned to each tender, in case they want to obtain any clarification/ help from the Helpdesk.

Preparation for submission of Bid:

Technical Bid and Price Bid to be submitted on-line at https://eprocure.gov.in/eprocure/app.

(i) For preparation of bid Bidders shall search the tender from published tender list available on site and download the complete tender document and should take into account corrigendum if any published before submitting their bids.

After selecting the tender document same shall be moved to the 'My favourite' folder of bidders account from where bidder can view all the details of the tender document.

(ii) Bidder shall go through the tender document carefully to understand the documents required to be submitted as part of the bid. Bidders shall note the number of covers in which the bid documents have to be submitted, the number of documents – including the names and content of each of the document that need to be submitted. Any deviations from these may lead to rejection of the bid.

(iii) Any pre-bid clarifications if required, then same may be obtained online through the tender site, or through the contact details given in the tender document.

(iv) Bidders should get ready in advance the bid documents in the required format (PDF/xls/rar/dwf/jpg formats) to be submitted as indicated in the tender document/schedule. Bid documents may be scanned with 100 dpi with black and white option which helps in reducing size of the scanned document.

(v) To avoid the time and effort required in uploading the same set of standard documents which are required to be submitted as a part of every bid, a provision of uploading such standard documents (e.g. PAN card copy, Annual Reports, Auditor Certificates etc.) has been provided to the bidders. Bidders can use "My Space" or "Other Important Documents" area available to them to upload such documents. These documents may be directly submitted from the "My Space" or "Other Important Documents" area as per tender requirements while submitting the bid, and need not be uploaded again and again. This will lead to reduction in the time required for bid submission process.

SUBMISSION OF BIDS:

Two-Part Bid procedure shall be adopted for submission and evaluation of the bids. The Bidder shall accordingly prepare and submit the bids containing the required documents up to the date and time given in NIT. The bidder shall prepare the bid and submit the bid in following manner:

i) Bidder should log into the site well in advance for bid submission so that he/ she upload the bid in time i.e. on or before the bid submission time.

ii) Bidder should prepare the Tender Fee and EMD as per the instructions specified in the NIT/ tender document. The details of the DD/BC/BG/ others physically sent, should tally with the details available in the scanned copy and the data entered during bid submission time. Otherwise the uploaded bid will be rejected.

iii) While submitting the bids online, the bidder shall read the terms & conditions (of CPP portal) and accepts the same in order to proceed further to submit their bid.

iv) Bidders shall select the payment option as offline to pay the Tender Fee/ EMD and enter details

of the DD/BC/BG/others.

v) Bidder shall digitally sign and upload the required bid documents one by one as indicated in the tender document.

vi) Bidders shall note that the very act of using DSC for downloading the tender document and uploading their offers is deemed to be a confirmation that they have read all sections and pages of the tender document without any exception and have understood the complete tender document and are clear about the requirements of the tender document.

vii) Bidder shall note that each document to be uploaded for the tender should be less than 2 MB. Bid documents may be scanned with 100 dpi with black and white option which helps in reducing size of the scanned document. For the file size of less than 1 MB, the transaction uploading time will be very fast.

viii) If price quotes are required in XLS format, utmost care shall be taken for uploading Schedule of quantities & Prices and any change/ modification of the price schedule shall render it unfit for bidding.

Bidders shall download the Bill of Quantities, in XLS format and save it without changing the name of the file. Bidder shall quote their rate in figures in the appropriate cells, thereafter save and upload the file in financial bid cover (Price bid) only. If the template of Bill of Quantities file is found to be modified/corrupted in the eventuality by the bidder, the bid will be rejected and further dealt as per provision of clause no 14.0 of ITB including forfeiture of EMD.

The bidders are cautioned that uploading of financial bid elsewhere i.e. other than in cover 2 will result in rejection of the tender.

ix) Bidders shall submit their bids through online e-tendering system to the Tender Inviting Authority (TIA) well before the bid submission end date & time (as per Server System Clock). **The TIA will not be held responsible for any sort of delay or the difficulties faced during the submission of bids online by the bidders at the eleventh hour**.

x) After the bid submission **(i.e. after Clicking "Freeze Bid Submission" i**n the portal), the bidders shall **take print out of system generated acknowledgement** number, and keep it as a record of evidence for online submission of bid, which will also act as an entry pass to participate in the bid opening.

xi) Bidders should follow the server time being displayed on bidder's dashboard at the top of the tender site, which shall be considered valid for all actions of requesting, bid submission, bid opening etc., in the e-tender system.

xii) All the documents being submitted by the bidders would be encrypted using PKI (Public Key Infrastructure) encryption techniques to ensure the secrecy of the data. The data entered cannot be viewed by unauthorized persons until the time of bid opening. The confidentiality of the bids is maintained using the secured Socket Layer 128 bit encryption technology.

ASSISTANCE TO BIDDERS:

xiii) Any queries relating to the tender document and the terms and conditions contained therein

should be addressed to the Tender Inviting Authority for a tender or the relevant contact person indicated in the tender.

xiv) Any queries relating to the process of online bid submission or queries relating to CPP Portal in general may be directed to the 24X7 CPP Portal Helpdesk No.0120-4200462, 0120-4001002, 0120- 4001005, 0120-6277787, E-mail: support-eproc [at]nic[dot]in.

Toll Free **Number 1800-3070-2232. Mobile Nos. 91-7878007972 and 91-7878007973.**

~~**Appendix-I Cl 22.3.2**~~

~~**Conditions for conducting e-RA**~~

1) ~~e-RA shall be implemented at Application Service Provider's Portal intimated by NHPC.~~

2) ~~e-RA shall be followed after e-tender as per provision of ITB.~~

3) ~~The Start Bid Price for Reverse Auction shall be the L1 Bidder's total evaluated Bid Price (including taxes & duties etc.) as per ITB Clause 22. The bidder shall modify their Bid Price in the decremented slab in terms of 0.1% or its multiples.~~

4) ~~e-RA will be done on total evaluated Bid Price and the unit rates of the winning bidder quoted in e-tender shall be reduced on pro-rata basis (excluding fixed rate items and abnormally low rated items) to match with the e-RA bid price.~~

   ~~The rates/prices quoted by the bidder in Bill of quantities for certain items (considering online price bid submitted through e-tender) which are found to be having negative variation of 25% & more in relation to the estimate shall be identified as Abnormally Low Rate (ALR) items.~~

5) ~~In cases where no bidder accepts to quote lower than the Base Price (Start Bid Price) , e- RA is to be treated as failed and in such cases, tender shall be evaluated based on already opened e-tender.~~

6) ~~After e-Reverse Auction and evaluating the lowest bid, the award shall be processed as per bid conditions.~~

7) ~~In case of failure of e-RA process for any reasons, e-tender results will be processed for award. Further, NHPC shall reserve the right to call the L1* bidder for further process/negotiation/cancel the e-reverse auction process/ re-tender at any time.~~

~~**Note:** The estimated cost shall be converted to a common base for comparison considering TT Selling exchange rate established by State Bank of India as on date of submission of Price Bid~~

~~*L1= Lowest Evaluated Bidder after e-tendering and/or e-Reverse Auction (as the case may be)~~

~~Appendix-II~~

~~Business Rules for e-Reverse Auction~~

1. ~~e-RA shall be implemented at Application Service Provider Portal intimated by NHPC. NHPC has made arrangements with a Service Provider, who will be NHPC's authorized Service Provider for e-Reverse Auction. Please go through the guidelines given below and submit your acceptance to the same.~~

2. ~~Bidders who are found technically and commercially acceptable, after e-tender are eligible to participate in e-RA. The intimation of schedule date & time to conduct e-RA shall be sent to eligible bidders in advance. e-Reverse Auction (e-RA) shall be conducted by the service provider on scheduled date and time. Eligible bidders shall participate from their own offices/ place of their choice. Internet connectivity shall be ensured by the respective bidders themselves. Designated officials i.e., Tender Inviting Authority of NHPC shall have access to portal and shall witness e-RA process.~~

   ~~The Service Provider (for e-RA) shall arrange to demonstrate/ train (if not trained earlier) bidders' nominated person(s), without any cost. They will also explain all the Rules related to e-Reverse Auction/Business Rules Document to be adopted along with training manual. The Application Service Provider (ASP) shall arrange to demonstrate/ train (if not trained earlier) bidders' nominated person(s) through ONLINE training by ppts /Audio Visual file without any cost. These training materials are available on the portal all the time whenever bidders access the portal for such purposes. If bidders require any explanation in regard to the Rules related to e-Reverse Auction/ Business Rules Document to be adopted along with bid manual, the same shall be explained to the bidder through any means of communication i.e. telephonic/email.~~

   ~~For addressing any queries relating to the process of e-RA, the name and contact number of NHPC Authorized Service Provider for e-Reverse Auction shall be intimated in due course of time.~~

   ~~Any queries relating to the process of e-RA or in general, Tender Inviting Authority may be contacted.~~

3. ~~Before start of e-RA process, NHPC will provide the template calculation sheet (Excel Sheet) which will help bidders to arrive at "modified Bid Price" for the total scope as per BOQ.~~

   ~~Rank of the bidders would be displayed as per the "modified Bid Price" i.e., including Taxes and Duties as per the provisions of the Bidding Document.~~

4. ~~The start bid price (SBP) for e-Reverse Auction shall be lowest bidder's total evaluated bid price after e-tender (including taxes & duties) arrived as per relevant ITB Clause~~

defined in Appendix-I of ITB.

5. **Procedure of e-Reverse Auctioning:**

Dynamic Template Bidding (Rank Disclosed)

i) In 'Dynamic Template Bidding (Rank Disclosed)', bidders shall enter the Lump sum price in line with Clause 4 above for the total scope for subject Package. The value of decrement must be in decremented slab of minimum 0.1% and its multiple in terms of lowest bidder's total evaluated bid price after e-tender (SBP).

ii) In the "Dynamic Bidding" tie bid is not allowed on lowest price at e-RA Portal, i.e. if any higher price ranked vendor places bid equal to lowest price in e- reverse auction, their bid will be rejected. The bidder is required to click on "Rejected" to know the reason of bid rejection. In that case, the bidder will have to instantly reduce their price within **10 minutes** to submit lower quoted price otherwise the price will be considered as higher bid or rejected bid (system does not support tie bids in this type of auction).

ii) The modified bid prices received under e-RA shall be evaluated on the basis of evaluation method specified in the bidding document and the final evaluated prices thus obtained shall be used for comparison of bids.

6. Within one (1) hour after conclusion of e-RA, Successful bidder shall furnish confirmation of final price quoted in Reverse Auction in line with price schedule (already available with them), to NHPC, duly signed and stamped (without any new condition other than those already agreed before start of Reverse Auction) (Appendix-IV). In case, there is any variation between the final price quoted in Reverse Auction and the signed document received after Auction, the first i.e. Closing Price in Auction will be taken final offered price by the bidder. However, the detailed break-up of final prices as per price formats with pro rata reduction in unit rates (excluding fixed rate items and abnormally low rated items) without increase in unit rates of any items, shall be submitted by the successful bidder matching with the final price quoted during e-RA within 3 days from the date of conclusion of e-RA.

7. Auction shall be for a period of **60 minutes**. The bidding continues with an auto extension of **15 min** time if any Bidder quotes a further lower price within final 15 minutes of specified closing time of auction.

   In final countdown and auto extension time, the lowest price at e-RA Portal would be visible to all the vendors who have placed valid bids. However, real identity of the bidder would not be disclosed during entire e-reverse auction process. The bidding could continue

   even after the final run till the time there are no changes in prices within aforesaid final **15 minutes**.

8. During Auction, if no bid is received within the specified time, NHPC, at its discretion, may decide to close the reverse auction process and proceed with results of e-

~~tendering.~~

9. ~~Each Bidder shall be assigned **Unique User Name & Password** by the service provider (for eRA). Bidders are advised to change the Password and edit the information in the Registration Page after the receipt of initial Password from the service provider (for e-RA) to ensure confidentiality. All bids made from the Login ID given to the bidder will be deemed to have been made by the bidder.~~

10. ~~Bidders shall be able to view the following on their screens along with the necessary fields during the auction.~~

    a) ~~Rank of the respective bidder@~~
    b) ~~Bid Placed by the respective bidder.~~

    ~~@ ***Price of Lowest bidders at e-RA Portal will be displayed in the last 15 minutes and in auto extension time***~~

11. ~~Consequent upon completion of e-Reverse Auction, NHPC's decision on award of contract shall be final and binding on all the bidders.~~

12. ~~NHPC shall be at liberty to call the*L1 bidder for further process/ negotiation/ cancel the e- Reverse auction process/ re-tender at any time, without assigning any reason thereof.~~

13. ~~NHPC/ Service Provider shall not have any liability to bidders for any interruption or delay in access to the site irrespective of the cause.~~

14. ~~NHPC along with Service Provider can decide to reschedule or cancel any Auction; the bidders shall be informed accordingly.~~

15. ~~The bidder shall not involve himself or any of his representatives in price manipulation of any kind directly or indirectly by communicating with other bidders. The bidder shall also not divulge either his bid or any other exclusive details of NHPC to any other party. If it has come to notice of NHPC/Service Provider that bidders have colluded while submitting price in e-RA, the same be dealt as per provision of Integrity Pact.~~

~~**16. Other terms and conditions shall be as per the bidding documents.**~~

~~*L1= Lowest Evaluated Bidder after e-tendering and/or e-Reverse Auction (as the case may be)~~

Appendix-III

Process Compliance Form for e-Reverse Auction

(Bidders are required to submit this on their Company's Letter Head and sign & stamp)

To,

[Employer's Name & Address]

Sub: Agreement to the Process related Terms and

Conditions Dear Sir,

This has reference to the Terms & Conditions for the e-Reverse Auction mentioned in the Business Rules for "_____(Name of Work)" with Tender Specification No.:_____and Tender ID.

This letter is to confirm that:

1. The undersigned is authorized representative* of the Company.
2. We have studied the e-Reverse Auction Terms & Conditions and the Business Rules governing the e-Reverse Auction as mentioned in your letter and confirm our agreement to them.
3. We also confirm that we shall take the training on the auction tool and shall understand the functionality of the same thoroughly, before start of e-RA.
4. We also confirm that we will submit price confirmation within an hour of conclusion of e-Reverse Auction through the Company email ID. However, break up of our final offered price in e-Reverse Auction as per NHPC's Price format and as per Conditions of e-RA shall be submitted within three working days. We also confirm that we will not increase unit rate of any item submitted in our bids.

We hereby confirm that we will honor the Bids placed by us during the auction process.

With regards,

Signature with company seal
Name –
Bidder /Company / Organization –
Designation within Company / Organization – Address of Company / Organization –

**Person having power of attorney for the subject package*

~~Appendix-IV~~

~~Format for submitting Price Confirmation for e-Reverse Auction~~

~~(To be submitted on Company Letter Head duly signed and stamped within1 Hrs.)~~

~~REF No. …….. Date:……..~~

~~To,~~

~~[Employer's Name & Address]~~

~~Contact Person: ……..~~

~~E-mail: ……~~

~~Re: Price Confirmation for the e-Reverse Auction of….....~~

~~Auction Notice Dated: ……..~~

~~For Procurement of :…..[...Name of work].~~

~~For M/s NHPC LIMITED: Tender Specification No.:_____and Tender ID. _____~~

~~Reference above, we hereby confirm that we have given our final offer in the e- Reverse Auction System as per the template, which is attached herewith duly signed and stamped from our end.~~

~~Signature:~~

~~Name:~~

~~Designation:~~

~~Seal of the Bidder / Company:~~

~~Appendix-I to NIT Ref. Clause 3.2(C) of NIT~~

~~Personnel Capabilities~~

~~Qualification and Experience of Key personnel~~

~~Sr. No.~~	~~Key personnel position~~	~~Qualification~~	~~Experience~~

INFORMATION OF BIDDERS (IFB)

Salal Power Station (6X115 = 690 MW) is located near Dhyangarh in Reasi district of Jammu & Kashmir. The project is on river Chenab.

Before participating in this tender, bidders may visit the location site if they desire so.

The distances between nearby places are given below: -

From	To	Distance in Kms.(Approx.)
Jyotipuram (Project H/Q)	Reasi (Distt. H/Q)	8
Jyotipuram (Project H/Q)	Jammu (Airport)	75
Jyotipuram (Project H/Q)	Katra (Nearest Broad Gauge Railhead)	40

एनएचपीसी लिमिटेड

(भारत सरकार का एक नवरत्न उद्यम)

NHPC Limited

(A Government of India Navratna Enterprise)

SECTION-III

- **LETTER OF TENDER FORM,**
- **QUALIFICATION INFORMATION,**
- **FORM OF DECLARATION,**

SECTION III

TABLE OF CONTENTS

Letter of Tender Form	
Form-2	Letter of Tender Form
Qualification Information	
Form-1	General Information
Form-3	Work Experience Record
Form-4	Annual turnover
Form of Declaration	
Form-5	Form of Declaration
Form-6	Declaration of Ineligibility
~~Form-7~~	~~Form of Integrity Pact~~ (Guidelines for banning of business dealings)
Form-8	Form for Declaration of Start-up
Form-9	Undertaking regarding near relative to official of the Employer
Form-10	Certificate of Insolvency
Form-11	Certificate of Local Content
Form-12	Declaration regarding Compliance of restrictions under Rule 144(xi) of GFR-2017 regarding procurement from bidders from a country or countries sharing Land Border with India.
Form-13	Checklist for Bidders

FORM – 1

General Information

Bidders are requested to complete the information

1.	Name of firm	Corporate Identity No. (CIN):.....
2.	Head office address Principal Place of Business:	Country:
3.	Telephone Mobile No.Email	Contact Person(s) Name Title/Position
4.	Place of incorporation / registration Date	
5.	Legal status of firm Field of specialty in business	
6.	Whether Start-up :	
7.	Number of present permanent employees:	
8.	Quality assurance system in head office	Certified by:
9.	Agent or representative in INDIA Name Address Telephone	(if exists) Fax & Email

Detail	Civil Engineers	Other Engrs	Non Engineering
Nos.			

10	**Authorization of Person(s) signing the bid on behalf of the Bidder** a) Full Name: …….. b) Designation: …….. c) Signing as: ……. ☐ A sole proprietorship firm: The person signing the bid is the sole proprietor/ constituted attorney of the sole proprietor, ☐ A partnership firm: The person signing the bid is duly authorized being a partner to do so, under the partnership agreement or the general power of attorney, ☐ A company: The person signing the bid is the constituted attorney by a resolution passed by the Board of Directors or in pursuance of the Authority conferred by Memorandum of Association. ☐ A Society: The person signing the bid is the constituted attorney. *Documents to be submitted: Registration Certificate/ Memorandum of Association/ Partnership Agreement/ Power of Attorney/ Board Resolution*
11	**Following documents w.r.t. legal status of the firm / company shall be furnished by the bidder:**
	I. In case of Sole Proprietorship Concern: i. The full name of an individual proprietor, his/her parentage, documentary proof of his/her age, permanent address and present postal address/ contact details. ii. A deed of declaration by the Proprietor, that no other individual or company has any share in the concern.
	II. In case of Partnership Firm: i. Certified photocopy of the Partnership Deed, with upto date amendments (if any). ii. Registration certificate issued by the Registrar of Companies concerned, if any. iii. In case of change in the constitution of the firm due to retirement or death or addition of an incoming partner, photocopy of Deed of Dissolution, fresh registration Certificate and the fresh / extant Partnership Deed, as applicable.
	III. In case of Private Limited Companies: i. Certified to be true and upto date amended copy of Memorandum and Articles of Association of the Company. ii. Certificate of incorporation of the Company.
	IV. In case of Public Limited Companies and Statutory Corporations: i. Certified to be true copy of Memorandum and Articles of Association of the Company and/or the relevant Statute/Act. ii. Certificate of Incorporation of the company - In case of public limited Co. only. iii. Certificate of Commencement of Business - In case of public limited Co. only.

Date Signature

FORM-2

Letter of Tender Form

To,
The General Manager (Electrical),
Contract & Procurement Division
NHPC Ltd., Salal Power Station
Jyotipuram, Reasi
UT of J&K-182312

We have read and examined the following tender documents relating to "Repair of damaged at TRT area during monsoon 2025 at Salal Power Station, Jyotipuram".

i. a) Agreement form

b) Notice Inviting Tender

c) Information and Instructions to Tenderers

d) Tender Forms, Form of Declaration and Qualification information

e) General Conditions of Contract and Schedules A, B, C, ~~D, E, F and G~~

f) Forms

g) Special Conditions of Contract

h) Safety Manual

ii. Technical Specifications

iii. Drawings.

iv. Amendment issued in pursuance to Clause No. 8 of ITB.

2. We hereby tender for execution of the work referred to in the documents mentioned in paragraph one above upon the terms and conditions contained or referred to in the aforesaid documents and in accordance in all respects with the specifications, designs, drawings and other details given herein and at the rates contained in Schedule-A and within the period(s) of completion as given in Schedule-D and subject to such terms and conditions as stipulated in the Bid Document.

3. We agree to keep this tender open for acceptance for 120 days from the last date of online bid submission thereof and also agree not to make any modifications in its terms and conditions on our own accord.

4. A sum of **₹1,08,000/- (Rupees One Lac Eight Thousand only)** is hereby enclosed in form of Demand Draft/Bank Guarantee from a Nationalized or Scheduled Bank of India as Earnest Money. We agree that if we fail to keep the validity of tender open, as aforesaid, or make any modification in the terms and conditions of our tender on our own accord or fail to furnish the prescribed performance guarantee within prescribed period, after the acceptance of our tender, that Employer shall without prejudice to any other right or remedy available in law be at liberty to forfeit the said earnest money absolutely. Further, we agree if we fail to commence the execution of the works as provided in the Bid Documents referred to in paragraph-1 above that Employer

shall without prejudice to any other right or remedy available in law be at liberty to forfeit the said performance guarantee absolutely/EMD.

Should this tender be accepted, we agree to abide by and fulfil all the terms and conditions and provisions of the above mentioned tender documents.

We certify that the Tender submitted by us is strictly in accordance with the terms, conditions, specifications etc. as contained in Tender Documents, referred to in paragraph-1 above, and it does not contain any deviations to the aforesaid documents. It is further certified that information furnished in the Tender submitted by us i s correct to the best of our knowledge and belief.

5. We hereby also declare that any of the firm/Company participating in this Tender have not been declared ineligible at the time of submitting the bid under Para-6 of Guidelines on Banning of Business Dealings, declaration in this regard is placed at Form-.....

6. We also certify that the bidder is a .....(Class-I / Class-II / non-local supplier) supplier under Make in India Order-2017 or as amended from time to time, Undertaking in this regard is enclosed at Form-10.

7. We also certify that the bidder is not ineligible under the reasons mentioned at Para 3.3 of NIT.

8. We hereby declare the GST Tax structure considered (applicable and assessed 28days prior to bid submission date) in our bid for the present work.

(Signature of person duly authorized to sign the Tender on behalf of the Bidder along with seal of company)

Name_____ Designation_____

Signature_____ Name of Company_____

Date:_____

Witness:

Name & Address: _____ Signature_____

_____ Date:_____

_____

FORM –3

(Ref. NIT Clause-3.1(b))

Work Experience Record

Name of Bidder:_____

Sl. No.	Name of Project	Name & Address of Project Developer	Description of Work & Contract no.	Value of Work	Date of Award/	Date of Start of work	Date of completion of work	Remarks
1								
2								
3								
4								
5								

Note: Copies of Work experience certificates from appropriate authority of project Developer with regard to above to be submitted by bidder.

Any addition work experience claimed after the bid submission shall not be considered during bid evaluation.

FORM –4

(Ref. NIT Clause-3.1(c))

Annual turnover

Name of Bidder: _____

Fiscal Year	*Turnover (unit)*
1. 2024-2025	
2. 2023-2024	
3. 2022-2023	

Fiscal year begins on 1st April in each calendar year.

Date Signature

NB: To please attach detailed data sheet wherever possible.

FORM – 5

(Ref. NIT Clause-2.1)

FORM OF DECLARATION

M/s ----------(name of Tenderer) having its registered office at ---------- (hereinafter referred to as `the Tenderer') having carefully studied all the Tender documents, specifications, drawings, etc. pertaining to the Work for "Repair of damaged at TRT area during monsoon 2025 at Salal Power Station, Jyotipuram", the local and site conditions and having undertaken to execute the said works. It is declared without any reservation whatsoever that:

1) the submitted Techno-Commercial/Price Bid proposals are without any deviations and are strictly in conformity with the documents issued by the Employer,

2) in case any deviations are noticed which might have crept inadvertently, that such deviations without reservation of any kind are automatically deemed to have been withdrawn by us,

3) we are familiar with all the requirements of the Contract and has not been influenced by any statement or promise of any person of the Employer,

4) we are experienced and competent Bidder to perform the Contract to the satisfaction of Employer and are familiar with all general and special laws, acts, ordinances, rules and regulations of the Municipalities, District, State and Central Government of India that may affect the work, its performance or personnels employed therein,

5) we hereby authorize the Employer to seek reference from our bankers for its financial position and undertake to abide by all labor welfare legislations, and

6) we confirm that the provisions Start up India Initiative of GoI,, ...)are applicable to us. Any change in the status of the organization occurring during the currency of the contract shall be informed to Employer.

The above statement submitted by us is true and correct to our best knowledge.

For and on behalf of the Tenderer

Dated:

FORM – 6

(Ref. NIT Clause-2.1(c))

FORM OF DECLARATION OF INELIGIBILITYUNDERTAKING

I/ We, M/s ……(Name of Bidder) hereby certify that I/we are not under the declaration of ineligibility for banning / delisting / blacklisting / debarment from business on the grounds mentioned in para 6 of Guidelines on banning of Business dealings (Annex-A) to Integrity Pact, ITB Clause 2 of Tender Document at the time of submitting the bid and shall intimate immediately of any such banning / delisting / blacklisting / debarring after submission of bid till award of tender.

(Seal & Signature of the Bidder)

Form- 7

(To be executed on plain paper at the time of submission of bid/ and on Non-judicial stamp paper of appropriate value by successful Bidder (Contractor) prior to signing of Contract Agreement)

(Format of Integrity

Pact) PRE CONTRACT

INTEGRITY PACT

Between

NHPC Limited, a company incorporated under the Companies Act 1956 and having its registered office at NHPC Office Complex, Sector-33, Faridabad-121003 (Haryana), hereinafter referred to as " The Employer" which expression shall mean and include, unless the context otherwise requires, his successors in office and assigns of the **First Part.**

And

M/s_____, a company/ firm/ individual (status of the company) and having its registered office at represented by Shri_____, hereinafter referred to as "The Bidder/Contractor" which expression shall mean and include, unless the context otherwise requires, his successors and permitted assigns of the **Second Part**.

WHEREAS the Employer proposes to procure under laid down organizational procedures, contract/s for ----------
----------(Name of the work/ goods/ services) and the Bidder/Contractor is willing to offer against NIT No.
……

WHEREAS the Bidder/Contractor is a private company / public company/Government undertaking/partnership/consortium/joint venture constituted in accordance with the relevant law in the matter and the Employer is a Public Sector Enterprise.

NOW, THEREFORE,

To avoid all forms of corruption by following a system that is fair, transparent and free from any influence/prejudiced dealings prior to, during and subsequent to the currency of the contract to be entered into with a view to:-

Enabling the Employer to obtain the desired said (work/ goods/ services) at a competitive price in conformity with the defined specifications by avoiding the high cost and the distortionary impact of corruption on public procurement, and

Enabling the Bidder(s)/Contractor(s) to abstain from bribing or indulging in any corrupt practice in order to secure the contract by providing assurance to them that their competitors will also abstain from bribing and other corrupt practices and the Employer will commit to prevent corruption, in any form, by its officials by following transparent procedures.

~~1.0 Commitments of the Employer~~

~~**1.1** The Employer undertakes that no official of the Employer, connected directly or indirectly with the contract, will demand, take a promise for or accept, directly or through intermediaries, any bribe, consideration, gift, reward, favour or any material or immaterial benefit or any other advantage from the Bidder/Contractor, either for themselves or for any person, organization or third party related to the contract in exchange for an advantage in the bidding process, bid evaluation, contracting or implementation process related to the contact.~~

~~1.2. The Employer will, during the pre-contract stage, treat all the Bidders/Contractors alike, and will provide to all the Bidders/Contractors the same information and will not provide any such information to any particular Bidder/Contractor which could afford an advantage to that particular Bidder/Contractor in comparison to other Bidders/Contractors.~~

~~1.3. All the officials of the Employer will report to the appropriate Authority any attempted or completed breaches of the above commitments as well as any substantial suspicion of such a breach.~~

~~**2.0** In case any such preceding misconduct on the part of such official(s) is reported by the Bidder to the Employer with full and verifiable facts and the same is prima facie found to be correct by the Employer, necessary disciplinary proceedings, or any other action as deemed fit, including criminal proceedings may be initiated by the Employer or Independent External Monitor and such a person shall be debarred from further dealings related to the contract process. In such a case while an enquiry is being conducted by the Employer the proceedings under the contract would not be stalled.~~

~~3.0 Commitments of the Bidder(s)/Contractor(s)~~

~~The Bidder(s)/Contractor(s) commits themselves to take all measures necessary to prevent corrupt practices, unfair means and illegal activities during any stage of its bid or during any pre-contract or post- contract stage in order to secure the contract or in furtherance to secure it and in particular commit themselves to observe the following principles during participation in the tender process and during contract execution:-~~

~~3.1. The Bidder(s)/Contractor(s) will not offer, directly or through intermediaries, any bribe, gift, consideration, reward, favour, any material or immaterial benefit or other advantage, commission, fees, brokerage or inducement to any official of the Employer, connected directly or indirectly with the bidding process, or to any person, organization or third party related to the contract in exchange for any advantage in the bidding, evaluation, contracting and implementation of the contract.~~

~~3.2 The Bidder/Contractor further undertakes that it has not given, offered or promised to give, directly or indirectly any bribe, gift consideration, reward, favour, any material or immaterial benefit or other advantage, commission, fees, brokerage or inducement to any official of the Employer or otherwise in procuring the Contract or forbearing to do or having done any act in relation to the obtaining or execution of the contract or any other contract with Employer for showing or forbearing to show favour or disfavour to any person in relation to the contract or any other contract with Employer.~~

~~3.3 The Bidder(s)/Contractor(s) shall disclose the name and address of agents and representatives and Indian Bidder(s)/Contractor(s) shall disclose their foreign principals or associates.~~

~~3.4 The Bidder(s)/Contractor(s) shall, when presenting their bid, disclose any /all payments made, is commited to or intends to make to agents, brokers or any other intermediaries, in connection with this bid/award of the contract~~

~~3.5 Deleted.~~

~~3.6 The Bidder, either while presenting their bid or during pre-contract negotiations or before signing the contract, shall disclose any payments made, is committed to or intends to make to officials of the Employer or their family members, agents, brokers or any other intermediaries in connection with the contract and the details of services agreed upon for such payments.~~

~~3.7 The Bidder/Contractor will not collude with other parties interested in the contract to impair the transparency, fairness and progress of the bidding process, bid evaluation, contracting and implementation of the contract.~~

~~3.8 The Bidder/Contractor will not accept any advantage in exchange for any corrupt practice, unfair means and illegal activities.~~

~~3.9 The Bidder/Contractor shall not use improperly, for purposes of competition or personal gain, or pass on to others, any information provided by the Employer as part of the business relationship, regarding plans, technical proposals and business details, including information contained in electronic data carrier. The Bidder/Contractor also undertakes to exercise due and adequate care lest any such information is divulged.~~

~~3.10 The Bidder(s)/Contractor(s) commits to refrain from giving any complaint directly or through any other manner without supporting it with full and verifiable facts.~~

~~3.11 The Bidder(s)/Contractor(s) shall not instigate or cause to instigate any third person to commit any of the actions mentioned above.~~

~~3.12 If the Bidder/Contractor or any employee of the Bidder/Contractor or any person acting on behalf of the Bidder/Contractor, either directly or indirectly, is a relative of any of the officers of the~~

~~Employer, or alternatively, if any relative of an officer of the Employer has financial interest/stake in the Bidder(s)/Contractor(s) firm(excluding Public Ltd. Company listed on Stock Exchange), the same shall be disclosed by the Bidder/Contractor at the time of filling of tender.~~
~~The term 'relative' for this purpose would be as defined in Section 2(77) of the Companies Act 2013.~~

~~3.13 The Bidder(s)/Contractor(s) shall not lend to or borrow any money from or enter into any monetary dealings or transactions, directly or indirectly, with any employee of the Employer.~~

~~3.14 The representative of the Bidders/Contractors signing Integrity Pact shall not approach the Courts while representing the matters to IEMs and he/she will wait their decision in the matter.~~

~~3.15 In case of Sub-Contracting, the bidder shall take the responsibility of the adoption of Integrity Pact by the Sub-Contractor.~~

~~4.0 Previous Transgression~~

~~**4.1** The Bidder(s)/Contractor(s) declares that no previous transgression occurred in the last three years immediately before signing of this Integrity Pact, with any other company in any country in respect on any corrupt practices envisaged hereunder or with any Public Sector Enterprise in India or any Government Department in India.~~

~~5.0 Earnest Money (Security Deposit)~~

~~The provision regarding Earnest Money/Security Deposit as detailed in the Notice Inviting Tender (NIT) and Instruction to Bidders (ITB) section of the Bid Document is to be referred.~~

~~6.0 Sanctions for Violations~~

~~**6.1** Any breach of the aforesaid provisions, before award or during execution by the Bidder/Contractor or any one employed by it or acting on its behalf such as to put their reliability or credibility in question shall entitle the Employer to take action as per the procedure mentioned in the "**Guidelines on Banning of Business Dealings**" attached as **Annexure-A** and initiate all or any one of the following actions, wherever required:~~

~~(i) To immediately call off the pre contract negotiations without assigning any reason or giving any compensation to the Bidder/Contractor. However, the proceedings with the other Bidder(s)/Contractor(s) would continue.~~

~~(ii) The Earnest Money Deposit (in pre-contract stage) and/or Security Deposit/Performance Bond (after the contract is Signed) shall stand forfeited either fully or partially, as decided by the Employer and the Employer shall not be required to assign any reason thereof.~~

~~(iii) To immediately cancel the contract, if already signed, without giving any compensation to the Contractor. The Bidder/Contractor shall be liable to pay compensation for any loss or damage to the Employer resulting from such cancellation/rescission and the Employer shall be entitled to deduct the amount so payable from the money(s) due to the Bidder/Contractor.~~

(iv) Deleted.

(v) To encash the Bank guarantee, in order to recover the dues if any by the Employer, along with interest as per the provision of contract.

(vi) Deleted .

(vii) To debar the Bidder/Contractor from participating in future bidding processes of NHPC Ltd., as per provisions of "Guidelines on Banning of Business Dealings" of NHPC Ltd. (**Annexure-A**), which may be further extended at the discretion of the Employer.

(viii) To recover all sums paid in violation of this Pact by Bidder(s)/Contractor(s) to any middleman or agent or broker with a view to securing the contract.

(ix) In cases where irrevocable Letters of Credit have been received in respect of any contract signed by the Employer with the Bidder/ Contractor, the same shall not be opened/operated.

(x) Forfeiture of Performance Security in case of a decision by the Employer to forfeit the same without assigning any reason for imposing sanction for violation of this Pact.

6.2 The Employer will be entitled to take all or any of the actions mentioned at para 6.1 (i) to (x) of this Pact also on the Commission by the Bidder/Contractor or any one employed by it or acting on its behalf (whether with or without the knowledge of the Bidder/Contractor), of an offence as defined in Chapter IX of the Indian Penal Code, 1860 or Prevention of Corruption Act, 1988 or any other statute enacted for prevention of corruption.

6.3 The decision of the Employer to the effect that a breach of the provisions of this Pact has been committed by the Bidder/Contractor shall be final and conclusive on the Bidder/Contractor. However, the Bidder/Contractor can approach the Independent External Monitor(s) appointed for the purposes of this Pact.

7.0 Independent External Monitor(s)

7.1 The Employer has appointed Independent External Monitors (hereinafter referred to as monitors) for this Pact after approval by the Central Vigilance Commission.

7.2 The task of the Monitors shall be to review independently and objectively, whether and to what extent the parties comply with the obligations under this Pact.

7.3 The Monitors shall not be subject to instructions by the representatives of the parties and perform their functions neutrally and independently. The Monitors report to CMD, NHPC.

7.4 Both the parties accept that the Monitors have the right to access all the Contract documents relating to the project/procurement, including minutes of meetings, whenever required. The right to access records should only be limited to the extent absolutely necessary to investigate the issue related to the subject tender/contract.

7.5 As soon as the Monitor notices, or has reason to believe, a violation of this Pact, he / she will so

~~inform CMD, NHPC and request NHPC Ltd. to discontinue or take corrective action, or to take other relevant action. The Monitor can in this regard submit non-binding recommendations. Beyond this the Monitor has no right to demand from the parties that they act in a specific manner, refrain from action or tolerate action.~~

~~**7.6** The Bidder(s)/Contractor(s) accepts that the Monitor has the right to access without restriction, to all Project documentation of the Employer including that provided by the Bidder/Contractor. The Bidder/Contractor will also grant the Monitor, upon his / her request and demonstration of a valid interest, unrestricted and unconditional access to their project documentation. The same is applicable to Subcontractor(s). The Monitor shall be under contractual obligation to treat the information and documents of the Bidder/Contractor/Subcontractor(s) with confidentiality. The Monitor has also signed declaration on 'Non-Disclosure Agreement' and of 'Absence of Conflict of Interest'. In case of any conflict of interest arising at an later date, the IEM shall inform CMD, NHPC and recuse himself / herself from that case.~~

~~**7.7** The Employer will provide to the Monitor sufficient information about all meetings among the parties related to the project provided such meetings could have an impact on the contractual relations between the parties. The parties will offer to the Monitor the option to participate in such meetings as and when required.~~

~~7.9 The Monitor will submit a written report to the CMD, NHPC Ltd., within 8 to 10 weeks from the date of reference or intimation to him by the Employer/Bidder and should the occasion arise, submit proposals for correcting problematic situations.~~

~~7.10 The word 'Monitor' would include both singular and plural.~~

~~8.0 Facilitation of Investigation~~

~~In case of any allegation of violation of any provisions of this Pact or payment of commission, the Employer or its agencies shall be entitled to examine all the documents including the Books of Accounts of the Bidder/Contractor and the Bidder/Contractor shall provide necessary information and documents in English and shall extend all possible help for the purpose of such examination.~~

~~9.0 Law and Place of Jurisdiction~~

~~This Pact is subject to Indian Law. The place of performance and jurisdiction is the Registered Office of the Employer, i.e. Faridabad (Haryana). The arbitration clause provided in the tender document/contract shall not be applicable for any issue/dispute arising under Integrity Pact.~~

~~10.0 Other Legal Actions~~

~~**10.1** The actions stipulated in this Integrity Pact are without prejudice to any other legal action that may follow in accordance with the provisions of the extant law in force relating to any civil or criminal~~

~~proceedings.~~

~~10.2~~ ~~Changes and supplements as well as termination notice need to be made in writing.~~

~~10.3~~ ~~If the Contractor is a partnership or a consortium or a joint venture, this pact must be signed by all partners of the consortium/joint venture.~~

~~11.0~~ **~~Validity~~**

~~11.1~~ ~~The validity of this Integrity Pact shall be from date of its signing and expires for the Contractor 12 months after the last payment under the contract, and for all other Bidders 6 months after the contract has been awarded. Any violation of the same would entail disqualification of the bidders and exclusion from business dealings.~~

~~11.2~~ ~~Should one or several provisions of this Pact turn out to be invalid, the remainder of this Pact shall remain valid. In this case, the parties will strive to come to an agreement to their original intention.~~

~~11.3~~ ~~Issues like Warranty / Guarantee etc. shall be outside the purview of IEMs.~~

~~11.4~~ ~~In the event of any contradiction between Integrity Pact and its Annexure, the clause in the Integrity Pact will prevail.~~

~~For & On behalf of the Employer~~	~~For & On behalf of the Bidder / Contractor~~
~~(Office Seal)~~	~~(Office Seal)~~
~~Place----------~~	~~Place----------~~
~~---~~	~~---~~
~~Date.....~~	~~Date----------~~
~~Witness1._____~~	~~Witness1._____~~
~~(Name and address)~~	~~(Name and address)~~
~~2._____~~	~~2._____~~
~~(Name and address)~~	~~(Name and address)~~

Annexure-A

Guidelines on Banning Business Dealings

1. Introduction

NHPC Limited (NHPC) deals with Agencies viz. parties/ contractors/ suppliers/ bidders, who are expected to adopt ethics of highest standards and a very high degree of integrity, commitments and sincerity towards the work undertaken. It is not in the interest of NHPC to deal with Agencies who commit deception, fraud or other misconduct in the tendering process and/or during execution of work undertaken. NHPC is committed for timely completion of the Projects within the awarded value without compromising on quality.

1.2 Since banning of business dealings involves civil consequences for an Agency concerned, it is incumbent that adequate opportunity of hearing is provided and the explanation, if tendered, is considered before passing any order in this regard keeping in view the facts and circumstances of the case.

2.0 Scope

2. 1 NHPC reserves its rights to remove from list of approved suppliers / contractors (if such list exists) or to Suspend/Ban Business Dealings if any Agency has been found to be non / poor performing or have committed misconduct or fraud or anything unethical or any of its action(s) which falls into any such grounds as laid down in this policy.

2.2 The procedure of (i) Removal of Agency from the List of approved suppliers / contractors; (ii) Suspension and (iii) Banning of Business Dealing with Agencies, has been laid down in these guidelines.

2.3 These guidelines shall apply to all the units of NHPC.

2.4 These guidelines shall not be applicable in Joint Venture, Subsidiary Companies of NHPC unless they are assignees, successors or executor.

2.5 The suspension/banning except suspension/banning under Integrity Pact shall be with prospective effect, i.e. future business dealings.

3.0 Definitions

In these Guidelines, unless the context otherwise requires:

i) ***"Agency /Party / Contractor / Supplier / Bidders/Vendors"*** *shall mean and include a public limited company or a private limited company, a joint Venture, Consortium, HUF, a firm whether registered or not, an individual, cooperative society or an association or a group of persons engaged in any commerce, trade, industry, etc. "Party / Contractor/ Supplier / Bidder/Vendor" in the context of these guidelines is indicated as 'Agency'.*

ii) ***"Unit"*** *shall mean the Corporate Office, Project/ Power Station/ Regional Office/*

Liaison Office or any other office of NHPC.

iii) *"**Competent Authority"** and '**Appellate Authority'** shall mean the following:*

a) For works awarded/under Tendering from corporate office (falling in the competency of CMD /Board of Directors)

- Competent Authority: CMD
- Appellate Authority : Board of Directors

b) For works awarded/under Tendering from Corporate Office/Projects/ Power Stations/ Regional Offices/Liaison Offices (falling in the competency of Director /Executive Director)

- Competent Authority: Concerned Director/Executive Director as the case may be
- Appellate Authority: CMD /Concerned Director as the case may be

c) For works awarded/under Tendering from Corporate Office / Regional Offices / Projects/ Power Stations/ Liaison Offices (falling in the competency of CGM and below)

- Competent Authority in case of works awarded/under Tendering from Corporate Office/Regional office shall be CGM or GM of the concerned division as the case may be.

- Competent Authority: Head of the Unit not below the rank of General Manager
- Appellate Authority: Next higher authority

iv) **"Investigating Committee"** shall mean a Committee appointed by Competent Authority to conduct investigation.

4.0 Initiation of Suspension /Banning

Action for Suspension / Banning Business Dealings with any Agency shall be initiated by the department responsible for invitation of Bids/Engineer-in-charge after noticing the irregularities or misconduct on the part of Agency concerned. Besides the concerned department, Vigilance Department of each Unit/ Corporate Vigilance may also be competent to initiate such action.

5.0 Suspension of Business Dealings.

5.1 If the conduct of any Agency dealing with NHPC is under investigation, the Competent Authority may consider whether the allegations (under investigation) are of a serious nature and whether pending investigation, it would be advisable to continue business dealing with the Agency. If the Competent Authority, decides that it would not be in the interest to continue business dealings pending investigation, it may suspend business dealings with the Agency.

The order of suspension would operate for a period not more than six months and may be communicated to the Agency as also to the Investigating Committee. The Investigating Committee may ensure that their investigation is completed and whole process of final order is over within such period. However if the investigations are not completed within six months ,the investigation committee shall put up the proposal to the competent authority for approval of extension of time maximum up to further three months with in which the committee shall conclude the proceedings .

5.2 The order of suspension shall be effective throughout NHPC in case of work falling in the Competency of CMD/ Board of Directors/Directors, in case of work falling in the competency of Executive Director suspension shall be effective throughout Region /Corporate office (in case the works awarded/under Tendering from Corporate office) .In case of work falling in the competency of HOP or below suspension shall be effective throughout the Project/Power Station and attached liaison offices/units and in case of work falling under the competency of CGM and below at Corporate office suspension shall be effective at Corporate office. During the period of suspension, no business dealing shall be held with the Agency.

5.3 If the Agency concerned asks for detailed reasons of suspension, the Agency may be informed that its conduct is under investigation. It is not necessary to enter into correspondence or argument with the Agency at this stage.

5.4 It is not necessary to give any show-cause notice or personal hearing to the Agency before issuing the order of suspension.

5.5 The format for intimation of suspension of business dealing is placed at **Appendix– I**

6.0 Ground on which Banning of Business Dealings can be initiated

6.1 If the security consideration, including questions of loyalty of the Agency to NHPC so warrants;

6.2 If the director /owner of the Agency, proprietor or partner of the firm, is convicted by a Court of Law for offences involving moral turpitude in relation to its business dealings with the Government or any other public sector enterprises, during the last five years;

6.3 If the Agency has resorted to Corrupt, Fraudulent, Collusive, Coercive practices including misrepresentation of facts and violation of the any provisions of the Integrity Pact provided in the Contract.

6.4 If the Agency uses intimidation / threatening or brings undue outside pressure on NHPC or its official for acceptance / performances of the job under the contract;

6.5 If the Agency misuses the premises or facilities of NHPC, forcefully occupies or damages the NHPC's properties including land, water resources, forests / trees or tampers with documents/records etc.

6.6 If the Agency does not fulfil the obligations as required under the Contract and Violates terms

& conditions of the contract which has serious affect for continuation of the Contract.

6.7 If the work awarded to the agency has been terminated by NHPC due to poor performance of the contract in the preceding 5 years.

6.8 If the Central Vigilance Commission, Central Bureau of Investigation or any other Central Government investigation Agency recommends such a course in respect of a case under investigation or improper conduct on agency's part in matters relating to the Company (NHPC) or even otherwise;

6.9 On any other ground upon which business dealings with the Agency is not in the public interest.

6.10 If business dealings with the Agency have been banned by the Ministry of Power, Government of India OR any PSU/ any other authority under the MOP if intimated to NHPC or available on MOP Website, the business dealing with such agencies shall be banned with immediate effect for future business dealing except banning under Integrity Pact without any further investigation.

(Note: The examples given above are only illustrative and not exhaustive. The Competent Authority may decide to ban business dealing for any good and sufficient reason).

7.0 Procedure for Banning of Business Dealings

7. 1 An Investigating Committee shall be constituted by the authority competent to Ban the dealing comprising members from Engineering/Indenting department (convener), Finance, Law and Contract. The level of the committee members shall be CGM and above for works falling in the competency of CMD/Board of Directors, General Manager and above for the works falling in the competency of Director/ Executive Director and DGM/SM with at least one member of the level of General Manager for works falling in the competency of CGM and below.

7.2 The order of Banning of Business Dealings shall be effective throughout the NHPC. During the period of Banning of Business Dealings, no Business Dealing shall be held with the Agency.

7.3 The functions of Investigating Committee in each Unit to be appointed by the competent authority in line with para 3 (iii) shall, inter-alia include:

a) To study the report of the department responsible for invitation of bids and decide if a prima- facie case for banning exists, if not, send back the case to the Competent Authority.

b) To recommend for issue of show-cause notice (after vetting by legal deptt.) to the Agency by the concerned department as per clause 7.4 "Show Cause Notice".

c) To examine the reply to show-cause notice and call the Agency for personal hearing,

if required.

d) To submit final recommendations to the Competent Authority for banning or otherwise including the period for which the ban would be operative considering the implications for NHPC on account of the act/omission on the part of the agency, intention of the agency as established from the circumstances of the case etc.

7.4 Show Cause Notice

Once the proposal for issuance of Show Cause Notice is approved by the Competent Authority, a 'Show Cause Notice' (as per format at **Appendix-II** of these guidelines) s h a l l be issued to the delinquent Agency by the Competent Authority or by a person authorized b y t h e Competent Authority for the said purpose. The Agency shall be asked to submit the reply to the Show Cause Notice within 15 days of its issuance. Further, the Agency shall be given an opportunity for Oral hearing to present its case in person, if it so desires, and the date for Oral Hearing shall necessarily be indicated in the Show Cause Notice.

The purpose of issuing the Show Cause Notice is only that the Agency concerned shall be given an opportunity to explain their stand before any action is taken. The grounds on which action is proposed to be taken shall be disclosed to the Agency inviting representation and after considering that representation, orders may be passed. Such orders require only the satisfaction of the authority that passed the final orders.

If the Agency requests for inspection of any relevant document in possession of NHPC, necessary facility for inspection of documents may be provided.

During the conductance of oral hearing, only the regular duly authorized employees of Agency will be permitted to represent the Agency and no outsider shall be allowed to represent the Agency on its behalf.
Reply to the Show Cause Notice given by the Agency and their submissions in oral hearing, if any, will be processed by the Committee for obtaining final decision of the Competent Authority in the matter.

In case, no reply to Show Cause Notice is received from the Agency within stipulated time, further reminder shall be given with further period of 10 days thereafter if no reply is received action for processing ex-parte against the concerned Agency shall be initiated.

7.5 Speaking Order

The speaking order (reasoned order) for banning the business dealing with the Agency shall be issued by the Competent Authority or by a person authorized for the said purpose.

The decision regarding banning of business dealings taken after the issue of a Show Cause Notice and consideration of representation, if any, in reply thereto, shall be communicated to the Agency
concerned along with a reasoned order. The fact that the representation has been considered shall invariably be mentioned in the communication. Also the fact that if no reply was received ton the Show Cause Notice shall invariably be indicated in the final communication to the Agency.

The format for intimation of banning of business dealing is placed at **Appendix– III.**

7.6 Period of banning

In case banning is processed for violation of provisions of Integrity pact or due to corrupt or fraudulent practices, the Competent Authority shall decide on the period of banning on case to case basis depending on the gravity of the case and considering the implications for NHPC on account of the act/omission on the part of the Agency, intention of the Agency as established from the circumstances of the case etc. The period of banning shall not be less than 6 months and shall not exceed 2 years and in case termination of contract due to poor performance the period of banning shall be for 5 years. For contracts awarded to JV/Consortium, a constituent of the JV shall be permitted to participate in the bidding process if it has not been banned on grounds of its role and responsibility in the tendering process for which the Joint Venture has been banned in Past. In case if the Joint Venture which has been banned does not indicate the roles and responsibility of individual Partner(s) then, the partner of the banned Joint Venture shall only be allowed to participate in the bidding process if its participation share is less than 35%.

In case the information/documents submitted by Agency in competing for the tender found to be false/forged then NHPC, without prejudice to any other rights or remedies it may possess, shall recover from Agency the cost incurred in carrying out physical assessment for establishing veracity of such information/documents. In case Agency refuses to reimburse such cost to NHPC then banning period of Agency shall be extended by another one year.

7.7 Effect of Banning

As far as possible, the existing ongoing contract(s) with the Agency may continue unless the Competent Authority, having regard to the circumstances of the case, decides otherwise, keeping in view contractual and legal issues which may arise thereof. In case the existing Contracts are allowed to continue, the suspension/Banning of Business Dealing along with default of the Contractor shall be recorded in the experience certificate issued for the work.

The Agency, (after issue of the order of banning of business dealings) would not be allowed to participate in any future tender enquiry and if the Agency has already participated in tender process as stand-alone OR constituent of joint venture and the price bids are not opened, his techno-commercial bid will be rejected and price bid will be returned unopened. However, where the price bids of Agency have been opened prior to order of banning, bids of Agency shall not be rejected and tendering process shall be continued unless Competent Authority having regard to the circumstances of the case decides otherwise keeping in view the Contractual, Legal issues which may arise thereafter. However, in case the suspension /Banning is due to default of an Agency for the provisions under Integrity Pact and the Agency happens to be Lowest Bidder (L1), the tendering process shall be annulled and fresh tenders shall be invited.

During the Suspension/ Banning period, if it is found at any stage that Agency has participated in tender enquiry under a different name then such Agency would immediately be debarred from the tender/contract and its Bid Security/Performance Security would be forfeited. Payment, if any, made shall also be recovered.

After Suspension/ Banning order, the Suspended/ Banned Agency shall not be allowed to participate as Sub-Vendor/Sub-Contractor in the tenders.

Further, if the Suspended/ Banned agency is an approved Sub-Vendor under any Contract for such equipment/component/service, the Main Contractor shall not be permitted to place work order/Purchase order/Contract on the Suspended/ Banned agency as a Sub-Vendor /Sub-Contractor after the date of Suspension/ Banning even though the name of the party has been approved as a Sub-Vendor /Sub-Contractor earlier.

There would be no bar on procuring the spares and awarding Contracts towards Annual Maintenance (AMC)/ O&M/ Repair works on Agencies pertaining to the packages for which they have been banned provided the Equipment has been supplied by such Agency.

Banning of business dealing shall not be applicable to the Subsidiary Company of the Banned agency provided subsidiary company has not participated on the strength of the Banned agency. However, in case of a default by a Sub-Contractor, the banning shall be applicable to the Sub-Contractor as well as the Lead Partner of the concerned JV or the Sole bidder as the case may be.

7.8 Hosting at NHPC website

The concerned unit shall forward the name and details of the Agency (ies) banned along with period and reasons of banning to IT&C Division of Corporate Office for displaying the same on the NHPC website.

8.0 Appeal against the Decision of the Competent Authority.

The Agency may file an appeal against the order of the Competent Authority banning of business dealing before Appellate Authority. Such an appeal shall be preferred within 30 (Thirty) Days from the date of receipt of the order of banning of business dealing. Appellate Authority would consider the appeal if convinced may constitute another committee for further investigation. The investigation Committee constituted by the Appellate Authority shall study the report of the previous investigating committee and reply submitted by the Agency while filing its case for appeal and call the Agency for personal hearing , if requested by the Agency. Based on the recommendation of the committee Appellate Authority shall pass appropriate Speaking (Reasoned) order in line with Sub-Para 7.5 above which shall be communicated to the Agency as well as the Competent Authority (as per format enclosed as **Appendix-IV** with these guidelines).

9.0 Circulation of the names of Agencies with whom Business Dealings have been banned

The name of the concerned banned agency shall also be shared with MOP and other PSU in the sector and all the units of NHPC. The provisions of this policy supersede and will have overriding effect on all earlier guidelines, procedures & system issued for the similar purpose.

Appendix –I

(Format for Intimation of Suspension of business dealing)

BY REGD. POST/SPEED POST/COURIER

No……. Date……

To

M/s ……

Attn.: Shri ……..

Sub: Intimation of Suspension of Business

Dealings Dear Sir,

Whereas the work of ……. was awarded to your firm vide letter of award no …dt….. amounting to Rs.
.....
OR
In response to NHPC NIT (e-tender / physical tender) no ……dt. you have submitted your bid .
(strike out whichever is not applicable)

Whereas the conduct of your firm in respect of the following is under investigation:

Brief of the default

"Whereas the Competent Authority prima facie considered the allegations (under investigation) are of a serious nature and decided pending investigation, it is not in the interest of the corporation to continue business dealing with your firm

This order shall have the following effects:

(i) Further business dealings with your firm is Suspended within Region/Project/Unit/wide NHPC. The order of Suspension is effective with immediate effect and would operate for a period of six months or till the investigation is completed and whole process of final order is over within such period. However, if investigations are not completed in six months' time, the Competent Authority may extend the period of Suspension

(ii) During the period of Suspension, no business dealing shall be held with your firm. No enquiry / bid / tender shall be issued to your firm nor will the bids submitted by your firm be entertained.

(iii) In cases where tenders have already been issued to you and price bids are yet to be opened, the Price Bid submitted by you shall not be opened and BG/EMD, if any, submitted by you shall be returned.

(iv) In cases where tenders have already been issued to you and Price Bids have already been opened , the tendering process shall be continued

(v) In case of ongoing contracts between you & NHPC, (including cases were contract has already been awarded before the issue of Suspension order) you will be required to continue with the execution and perform as per terms of the contract.

(vi)(a) In case the Firm is in Joint Venture the following would also be applicable:

i) Participation of Agency in Joint Venture

Tenders in which your firm has been proposed as Joint Venture Partner by any of the bidders and price bids have been opened prior to Suspension of your firm in such cases the tendering process shall not be annulled on this ground and the Agency shall be permitted to continue as Partner in the Joint Venture for such bidding. However where event of Price Bid opening has not taken place prior to Suspension/Banning of Agency then in such case Agency shall not be permitted to participate as Partner in the Joint Venture.

ii) Banning of joint Venture:

As the Joint Venture is Banned, your firm intends to bid as Partner(s) of Joint Venture in bidding process then it shall be permitted to participate in the bidding process if it has not been Banned on grounds of its role and responsibility in the tendering process for which the Joint Venture has been Banned in Past. In case if the Joint Venture which has been Banned does not indicate the roles and responsibility of individual Partner(s) then, the partner of the Banned Joint Venture shall only be allowed to participate in the bidding process if its participation share is less than 35%.

(b) Your firm shall not be allowed to participate as Sub-Vendor/Sub-Contractor in the tenders.

Further if your firm is an approved Sub-vendor under any Contract for such

equipment/component/service, the Main Contractor shall not be permitted to place work order/Purchase order/Contract on your agency as a Sub-Vendor/Sub-Contractor after the date of Suspension/ Banning even though the name of the party has been approved as a Sub-Vendor/Sub-Contractor earlier.

(c) There would be no bar on procuring the spares and awarding Contracts towards Annual Maintenance (AMC)/ O&M/ Repair works on Agencies pertaining to the packages for which they have been Banned provided the Equipment has been supplied by such Agency.

(d) Banning of business dealing shall not be applicable to the Subsidiary company of the Banned agency provided subsidiary company has not participated on the strength of the Banned agency.

On expiry of the above period of Suspension/Banning, you may approach…… (Indicate the concerned procurement department), with request for revocation of the order mentioning inter-alia the steps taken by you to avoid recurrence of misconduct which has led to Suspension.

Yours faithfully,

For & On behalf of NHPC.

Note: Strike out whichever is not applicable

Appendix –II

(Format of Show Cause Notice)

BY REGD. POST/SPEED POST/COURIER

No……..

Date……

….

To

M/s ……

……

…..…… Attn.: Shri

……..

Sub: Show Cause Notice

Ref :

Dear Sir,

You are hereby required to Show Cause in writing within 15 days from the date hereof why Business Dealing with your firm should not be banned / your firm is placed in the Banning List (as the case may be) and be debarred from entering into any contracts with NHPC for the following reasons:

(Give Reasons)

Your reply (if any) should be supported by documents and documentary evidence which you wish to rely in support of your reply. In case you desire to present your case in person to NHPC, a personal hearing shall be conducted on ---
------ at ---------- Hours for which prior intimation be furnished to this office. Should you fail to reply to this Show Cause Notice within the time and manner aforesaid, it will be presumed that you have nothing to say and we shall proceed accordingly.

Your reply, if any, and the documents / documentary evidence given in support shall be taken into consideration prior to arriving at a decision.

Yours faithfully,

For & On behalf of NHPC.

Appendix –III

(Format for Intimation of Banning of Business Dealing)

BY REGD. POST/SPEED POST/COURIER

No……. Date……

To

M/s ……

Attn.: Shri ……..

Sub: Intimation of Suspension of Business

Dealings Dear Sir,

Whereas the work of ……. was awarded to your firm vide letter of award no …dtd….. amounting to Rs.
.....
OR
In response to NHPC NIT (e-tender / physical tender) no ……dt. you have submitted your bid .(strike whichever is not applicable)

Whereas the Competent Authority had prima facie considered the allegations as detailed below are of a serious nature and decided to conduct investigation.

" Brief of the Default may be mentioned"

Whereas show cause notice vide no … dtd… was served upon you. (whereas in spite of the opportunity given to you,
you failed to submit the reply to the show cause notice within the time period mentioned there upon or further extended period, if any). Whereas you submitted the reply along with documents vide your letter
no._____
dt.
_____and presented your case in the personal hearing dated …… (if any) . After considering the allegations made in the show cause notice, your reply to the show cause notice documents/documentary evidence in support thereof and personal hearing dated (if any), it has been decided to Ban the Business Dealing
with you and you are hereby debarred from entering into contracts with NHPC.

(In order to make the Intimation of Banning of Business Dealing Speaking Order (reasoned order), the issue of a Show Cause Notice and consideration of representation in reply to show cause notice , opportunity of personal hearing, if any, shall be communicated to the Agency concerned along with a reasoned order. The order for Banning should also contain the reasons with detailed justification for conclusion of decision to Ban the Agency. Also the fact that if no reply to the Show Cause Notice was received or request for personal hearing was not made shall invariably be indicated in the communication to the Agency. The above order shall mention the grounds considering violation of any provision of Integrity Pact, any ground mentioned in Guidelines of Banning of Business Dealings, default by the agency under fraudulent practice / or any unethical practice and/or violation of any provision of Tender/Contract Condition having serious implications.)

This order shall have the following effects:

i) Further business dealings with your firm is banned with immediate effect . The order of Banning would operate for a period of …….years/month Competent Authority may extend the period of Banning.

ii) During the period of Banning, no Business Dealing shall be held with your firm. No Enquiry / Bid / Tender shall be issued to your firm nor will the bids submitted by your firm be entertained.

iii) In cases where tenders have already been issued to you and Price Bids are yet to be opened, the
Price Bid submitted by you shall not be opened and BG/EMD, if any, submitted by you shall be returned.

iv) In cases where tenders have already been issued to you and price bids have already been opened, the Tendering Process shall be continued.

(v) In case of ongoing contracts between you & NHPC, (including cases where contract has already been awarded before the issue of Banning order) you will be required to continue with the execution and perform as per terms of the contract.

(vi) (a) In case the Firm is in Joint Venture the following would also be applicable:

i) Participation of Agency in Joint Venture

Tenders in which your firm has been proposed as Joint Venture Partner by any of the bidders and price bids have been opened prior to Banning of your firm in such cases the tendering process shall not be annulled on this ground and the Agency shall be permitted to continue as Partner in the Joint Venture for such bidding. However where event of price bid opening has not taken place prior to Banning of Agency then in such case Agency shall not be permitted to participate as Partner in the Joint Venture.

ii) Banning of joint Venture:

As the Joint Venture is banned, your firm intends to bid as Partner(s) of Joint Venture in bidding process then it shall be permitted to participate in the bidding process if it has not been banned on grounds of its role and responsibility in the tendering process for which the Joint Venture has been banned in Past. In case if the Joint Venture which has been banned does not indicate the roles and responsibility of individual Partner(s) then, the partner of the banned Joint Venture shall only be allowed to participate in the bidding process if its participation share is less than 35%.

(b) Your firm shall not be allowed to participate as Sub-Vendor/Sub-Contractor in the tenders.

Further if your firm is an approved Sub-vendor under any Contract for such equipment/component/service, the Main Contractor shall not be permitted to place work Order/Purchase Order/Contract on your agency as a Sub-Vendor/Sub-Contractor after the date of Banning even though the name of the party has been approved as a Sub-Vendor/Sub-Contractor earlier.

(c) There would be no bar on procuring the spares and awarding Contracts towards Annual Maintenance (AMC)/ O&M/ Repair works on Agencies pertaining to the packages for which they have been banned provided the Equipment has been supplied by such Agency.

(d) Banning of Business Dealing shall not be applicable to the Subsidiary company of the Banned Agency provided subsidiary company has not participated on the strength of the Banned Agency. However, in case of a default by a Sub-Contractor, the banning shall be applicable to the Sub-Contractor as well as the Lead Partner of the concerned JV or the Sole bidder as the case may be.

On expiry of the above period of Banning, you may approach…… (Indicate the concerned procurement department), with request for revocation of the order mentioning inter-alia the steps taken by you to avoid recurrence of misconduct which has led to Banning.

Further if you desire to appeal against this order you may do so within 30 days from the date of issue of this order to the appellate authority as here under:

Appellate Authority : ……

Designation:

Address:….. Ph . no.

e-mail :

Yours faithfully,

For & On behalf of NHPC.

Note: Strikeout whichever is not applicable

Appendix –IV

(Format for communication of Appellate Decision on Suspension/Banning Order)

BY REGD. POST/SPEED POST/COURIER

No……. Date……

To

M/s ……

Attn.: Shri ……..

Sub: Suspension Banning of Business Dealings - Intimation of decision of Appellate Authority

Ref: 1. Order dated.....Placing M/s on Suspension/Banning List by NHPC;

2. Your Appeal reference ……. Dt…….

Dear Sir,

This has reference to the order dt…… placing you on Suspension/Banning List and your appeal petition reference ….. dt.… on the same.

After considering the findings of the Original Authority in order and submissions made by you in your appeal , and the documents/documentary evidences available on record, it has been decided finally that :

- There is no infirmity in the order of the Original Authority, and the allegations stand substantiated and the Suspension/Banning for the period of …… years/month from the date of order, as ordered by the original Authority is upheld,
- Considering your submissions, the order of Suspension/Banning passed by the original authority is upheld , but with a reduction in period of Suspension/Banning for years/months from the date of order of original authority;
- Considering your submissions and the evidence available on record, there is enough justification to annul the order of the original authority.

(*** Incorporate any one of the above as applicable

##In order to make the Communication of Appellate Authority on Banning of Business Dealing Speaking Order (reasoned order), the fact that the representation of the agency has been considered and reference of grounds brought forward by the Agency in his defense and if any opportunity of personal hearing has been given to the Agency as a part of principle of natural justice shall invariably be mentioned in the communication, The order for Banning should also contain the reasons with detailed justification for conclusion of decision to Ban the Agency. Also the fact that if no sufficient ground has been furnished shall invariably be indicated in the final communication to the Agency. In case the option for Banning of Agency or reduction of Time Period for Banning of Agency is exercised then the above order shall mention the grounds considering violation of any provision of Integrity Pact, any ground mentioned in Guidelines of Banning of Business Dealings, default by the agency under fraudulent or any unethical practices and/or violation of any provision of Tender/Contract Condition having serious implications.)

Yours faithfully,
For & On behalf of NHPC.

FORM -8

(Ref. NIT Clause-3.2(E))

DECLARATION REGARDING APPLICABILITY OF START UPs UNDER START UP INDIA INITIATIVE

To,
Name & Address of the Employer

Subject: Declaration as regard to applicability of Startup India Initiatives

Startup India Initiative has been introduced by the Government of India and their revised definition has been notified in the Gazette notification-G.S.R. 127(E) dated 19.02.2019. In this notification an entity shall be considered as a startup: -

a) If it is incorporated as a private limited company (as defined in the Companies Act, 2013) or registered as a partnership firm (registered under section 59 of the Partnership Act, 1932) or a limited liability partnership (under the Limited Liability Partnership Act, 2008) in India; and
b) up to ten years from the date of its incorporation/ registration; and
c) If its turnover for any of the financial years since incorporation/ registration has not exceeded Rupees 100 crores; and
d) If it is working towards innovation, development or improvement of products or processes or services, or if it is a scalable business model with a high potential of employment generation or wealth creation.

Provided that any such entity formed by splitting up or reconstruction of a business already in existence shall not be considered a “startup”.

As such, it is requested to provide the confirmation as regard to applicability of Startup India Initiative to your firm by submitting the declaration/undertaking by_(last date of bid submission).

-------Sd-----
(Contract & Procurement Division)

Declaration/Undertaking

A) I/We confirm that the provisions of Startup India Initiatives are:

[ ] Applicable to us and our organization falls under the definition of Startups for the tendered work.

[ ] Not Applicable to us and our organization does not fall under the definition of Startups for the tendered work.

Please (tick) the appropriate box [ ] and attach documents / certificates, as applicable

B) I/We also undertake to inform the change in this status as aforesaid during the currency of the contract, if any.

(Authorized Representative of Firm)

(Ref. ITB Clause 31)

Form-9

Undertaking regarding near relative to any official of the Employer

(To be submitted on letter head)

I / We..... (Name of bidder) confirms that following persons are near relatives to the officials of the Employer working with our firm / company:

Sr. No.	Name and Designation of Employee of Bidder	Name and designation of near relative working with Employer	Relation
1			
2			
3			

(Authorised Representative of Bidder)

Name

Designation

Form-10

(Ref. NIT Clause no 3.2(F))

DECLARATION REGARDING INSOLVENCY PROCEEDINGS UNDER INSOLVENCY AND BANKRUPTCY CODE 2016

Subject: In respect of Domestic Competitive Bidding for (name of work).

It is declared that "no insolvency proceeding is admitted by the Adjudicating Authority against …….
(name of the bidder) under the IBC 2016".

Further, it is declared that after submitting the bid till the time of award of work, ...(name of the bidder) shall inform NHPC regarding any admission of application for corporate insolvency resolution process by the Adjudicating Authority under the IBC 2016 against …… (Name of the bidder) and any suppression of such fact shall render the ……. (name of the bidder) liable for rejection of our bid and banning of business dealing as per terms and conditions of Guidelines of banning of business dealings under Integrity Pact.

(To be submitted on letter head duly signed by the authorized representative of the Bidder)

.....

.....

.....

.....

.....

.....

Form-11

(Ref. NIT Clause-2.1(b))

(To be submitted by the bidder on the Companies Letter head duly signed by the authorized Signatory)

(Format for Self-declaration for Local Content in accordance with Public Procurement (Preference to Make in India) Order 2017 and as amended from time to time)

We M/s_____(name of Bidder) having registered office at …….. _____(Address of the Company) confirm that we have examined the **Make In India** provisions circulated by Government of India, Ministry of Commerce and Industry , Department for Promotion of Industry and Internal trade (DPIIT), vide order no. P-45021/2/2017-PP(BE-II) dated 04.06.2020 , MoP order No. 11/05/2018-Coord. dated 28.07.2020, MoP order no. 11/05/2018-Coord dated 17.09.2020 and MoP order no. A-1/2021-FSC/Part-5 dated 16.11.2021 and its amendment thereof related to "Local content", "Class-I local supplier", "Class-II local supplier" & "Local content percentage" and other provision mentioned therein Further, we also acknowledge that in case, it has been found that the declaration against local content percentage given by us is false then action can be initiated against us as per Govt. Guidelines under Make in India issued from time to time.

Name of the bidder	Country of origin	(% of local content to be mentioned by bidder)

Further we declare that cyber security/safety of the equipment/ process to be supplied / services to be rendered as safe to connect.

Note:

1. The responsibility of e-waste and its recycling/disposal shall be the responsibility of the registered e- waste handlers/Manufacturers/ Suppliers. The list of registered e-waste handler's /Manufacturers/ Suppliers for the corresponding items is to be given by the contractor.

2. All the items/components shall be supplied in compliance to cyber security policies/guidelines 2021 issued by CEA and any amendments thereof. The applicable security standards already specified in the contract.

3. Further, all bidders shall keep on visiting website of department for promotion of Industry and Internet Trade (DPIIT), Ministry of Commerce & Industry i.e. https://dpiit.gov.in to get updated/latest information regarding public procurement (Preference to Make in India) Order 2017.

( )

Signature of Authorized Signatory of Company

Note:

In case of Procurement for a value in excess of Rs.10 crores, the Class-I local supplier/Class-II Local supplier' shall be required to provide a certificate from the statutory auditors or cost auditors of the company (in the case of companies) or from a practicing cost accountant or practicing chartered accountant (in respect of suppliers other than companies) giving the percentage of local content.

Form-12

(Ref. NIT Clause no. 11.4.2)

Declaration regarding Compliance of restrictions under Rule 144(xi) of GFR-2017 regarding procurement from bidders from a country or countries sharing Land Border with India.

I/We ..... (name of bidder) have read the clause no. .....of NIT regarding restrictions on procurement from a bidder of a country which shares a land border with India ; I hereby certify that this bidder is not from such a country and is eligible to be considered.

I/we ..... (name of bidder) have read the clause regarding restrictions on procurement from a bidder of a country which shares a land border with India; I certify that this bidder is not from such a country or, if from such a country, has been registered with the Competent Authority. I hereby certify that this bidder fulfills all requirements in this regard and is eligible to be considered [Where applicable, evidence of valid registration by the Competent Authority shall be attached.]

I/we ..... (name of bidder) have read the clause regarding restrictions on procurement from a bidder of a country which shares a land border with India and on sub-contracting to contractors from such countries; I/we certify that this bidder is not from such a country or, if from such a country, has been registered with the Competent Authority and will not sub- contract any work to a contractor from such countries unless such contractor is registered with the Competent Authority. I hereby certify that this bidder fulfills all requirements in this regard and is eligible to be considered. [Where applicable, evidence of valid registration by the Competent Authority shall be attached.]

Evidence of valid registration by the Competent Authority is hereby attached. (Strikeout whichever is not applicable)

Duly authorized to sign bid for and on behalf of

…….

…….

[name & address of Bidder and seal of company]

Form-13

Checklist for Bidders

(To be submitted as part of Technical bid)

(On Company Letter-head)

Bidder's Name_____

[Address and Contact Details]

Bidder's Reference No._____ Date…….

Tender Document No.
Tender No.
Tender Title:

Note to Bidders: This check-list is merely to help the bidders to prepare their bids, it does not over-ride or modify the requirement of the tender. Bidders must do their own due diligence also.

Sr. No.	Documents submitted, duly filled, signed	Yes/ No/ NA
1.	Form 1 : General Information	
2.	Form 2 : Letter of Tender Form	
3.	Form 3 : Work Experience Record	
4	Form-4 : Annual turnover	
5	Form-5 : Form of Declaration	
6	Form-6 : Declaration of Ineligibility	
~~7~~	~~Form-7 : Form of Integrity Pact duly signed~~	
8	Form-8 : Form for Declaration of Start-up	
9	Form-9 Undertaking regarding near relative to official of the Employer	
10	Form-10 : Certificate of Insolvency	

11	Form-11 : self-Certificate of Local Content under Make in India policy, or from auditors/ cost accountant in case of Tenders above estimated cost Rs 10 Crore	
12	Form-12 : Declaration regarding Compliance of restrictions under Rule 144(xi) of GFR-2017 regarding procurement from bidders from a country or countries sharing Land Border with India.	
13	Bid Security	
14	Power of Attorney (if applicable)	
15	Price Schedule (BOQ) Excel Sheet downloaded from the Portal and filled and uploaded	
16	Any other requirements, if stipulated in NIT/ ITB; or if considered relevant by the Bidder	
17	Form 13: This Checklist	

……..

(Signature with date)

……..

(Name and designation)

Duly authorized to sign bid for and on behalf of…….

[name & address of Bidder and seal of company]

एनएचपीसी लिमिटेड

(भारत सरकार का एक नवरत्न उद्यम)

NHPC Limited

(A Government of India Navratna Enterprise)

SECTION -IV

GENERAL CONDITIONS OF CONTRACT (GCC)

AND SCHEDULES

GENERAL CONDITIONS OF CONTRACT

CONTENT

CLAUE	DESCRIPTION
1.0	DEFINITIONS
2.0	INTERPRETATIONS
3.0	SECURITY DEPOSIT FOR PERFORMANCE
4.0	REFUND OF SECURITY DEPOSIT
5.0	SUFFICIENCY OF TENDER
6.0	CONTRACT DOCUMENTS
7.0	BREAKDOWN OF LUMP SUM ITEMS
8.0	DUTIES AND POWERS OF ENGINEER-IN-CHARGE'S REPRESENTATIVE
9.0	ASSIGNMENT AND SUB-LETTING
10.0	FACILITIES TO OTHER CONTRACTORS
11.0	CHANGES IN CONSTITUTION
12.0	POSSESSION AND USE OF SITE
13.0	ADVANCES AND RECOVERY THEREOF
14.0	COMMENCEMENT OF WORK
15.0	WORKS TO BE CARRIED OUT IN ACCORDANCE WITH SPECIFICATIONS, DRAWINGS AND ORDERS, ETC.
16.0	SETTING OUT THE WORKS
17.0	URGENT WORKS
18.0	DEVIATIONS
19.0	CONTRACTOR'S SUPERVISION
20.0	INSTRUCTIONS AND NOTICES
21.0	CONSTRUCTION EQUIPMENT
22.0	PATENT RIGHTS

23.0 MATERIALS
24.0 POWER SUPPLY
25.0 SUPPLY OF WATER
26.0 WATCHING AND LIGHTING
27.0 WORK DURING NIGHT OR ON SUNDAYS AND HOLIDAYS
28.0 SITE DRAINAGE, PROTECTION OF TREES AND PREVENTION OF NUISANCE
29.0 LABOUR
30.0 REMOVAL OF CONTRACTOR'S MEN
31.0 MATERIALS OBTAINED FROM EXCAVATION AND TREASURE, TROVE, FOSSILS ETC
32.0 FORCE MAJEURE
33.0 LIABILITY FOR DAMAGE, DEFECTS OR IMPERFECTIONS AND RECTIFICATIONS THEREOF
34.0 CONTRACTOR'S LIABILITY AND INSURANCE
35.0 SUSPENSION OF WORKS
36.0 FORECLOSURE OF CONTRACT IN FULL OR IN PART DUE TO ABANDONMENT OR REDUCTION IN SCOPE OF WORK
37.0 TERMINATION OF CONTRACT ON DEATH
38.0 DEFAULT BY THE CONTRACTOR AND TERMINATION OF CONTRACT IN FULL OR IN PART
39.0 TIME FOR COMPLETION AND EXTENSIONS
40.0 COMPENSATION FOR DELAY
41.0 INSPECTION AND APPROVAL
42.0 COMPLETION CERTIFICATE
43.0 DEFECTS LIABILITY PERIOD
44.0 MEASUREMENTS
45.0 PAYMENT ON ACCOUNT

46.0 PRICE ADJUSTMENT/VARIATIONS

47.0 TAXES, DUTIES AND LEVIES ETC.

48.0 PAYMENT OF FINAL BILL

49.0 OVER PAYMENT AND UNDER PAYMENT

50.0 TRAINING OF APPRENTICES

51.0 CONTRACT MATTERS TO BE TREATED AS CONFIDENTIAL

52.0 LAWS GOVERNING THE CONTRACT

53.0 PROCEDURE FOR CLAIMS

54.0 SUM PAYABLE BY WAY OF COMPENSATION TO BE CONSIDERED AS REASONABLE WITHOUT REFERENCE TO ACTUAL LOSS

55.0 SETTLEMENT OF DISPUTES

56.0 DEFECTS LIABILITY CERTIFICATE & UNFULFILLED OBLIGATIONS

57.0 ECOLOGICAL BALANCE

58.0 GENERAL

59.0 EMPLOYMENT OF SKILLED AND UNSKILLED WORKERS

SECTION -IV

GENERAL CONDITIONS OF CONTRACT

CLAUSE-1: DEFINITIONS:

In the contract, the following expression shall, unless the context otherwise requires, have the meanings thereby respectively assigned to them:

(i) **Contract:** means the document forming the tender, acceptance thereof and the formal agreement executed between the NHPC Limited and the Contractor, together with documents referred to therein.

(ii) **Contract Price:** means the amount arrived at by multiplying the quantities shown in the Bill of Quantities by the respective item rates as included in the Letter of Acceptance.

(iii) **Contractor:** means the successful tenderer who is awarded contract to perform the work covered under these tender documents and shall be deemed to include the contractor's successors, executors, representatives or assigns.

(iv) **Corporation or Employer:** means the NHPC Limited having its registered office at Sector 33, Faridabad (Haryana), Pin-121003 and includes therein legal representatives, successors and assigns.

(v) **Tender Drawings:** means the drawings referred to in the Specifications and/or appended with the tender document.

(vi) **Construction Drawing**: means such drawings approved in writing by the Engineer-in-Charge/ Employer and issued for actual construction of the Works from time to time by the Engineer-in-Charge.

(vii) **Drawing:** means and shall include Tender drawing and Construction Drawing.

(viii) **Engineer-in-Charge/Engineer:** means the Engineering Officer nominated by the Employer or its duly authorized representative to direct, supervise and be in charge of the works for the purpose of this contract.

(ix) **Letter of Award or Acceptance:** means a letter from the Employer conveying the acceptance of the tender/offer subject to such reservations as may have been stated therein.

(x) **Specifications:** means the Technical Specifications of the Works included in the Contract and any modification thereof or addition thereto made under Clause 18 or submitted by the Contractor and approved by the Engineer.

(xi) **Sub-contractor:** means any person named in the Contract as a Subcontractor for a part of the Works or any person to whom a part of the Works has been subcontracted with the consent of the Employer and the legal successors in title to such person, but not any assignee of any such person.

(xii) **Cost:** means all expenditure properly incurred, whether on or off the Site, including overhead and

other charges properly allocable thereto but does not include any allowance for profit.

(xiii) **Bill of Quantities (BOQ) or Schedule of Quantities & Prices:** means the priced and completed Schedule of Quantities & Prices or bill of Quantities forming part of the Contract.

(xiv) **Time for Completion:** means the time for completing the execution of and passing the Tests on Completion of the Works as stated in the Contract (or as extended under Clause 39) calculated from the date of Letter of Acceptance.

(xv) **Works:** means the works to be executed (including Plant) and remedying of defect therein in accordance with the Contract.

(xvi) **Contractor's Equipment or Construction Equipment or Equipment's:** means all appliances and things of whatsoever nature (other than Temporary Works) required for the execution and completion of the Works, but does not include Plant, materials or other things intended to form or forming part of the Works.

(xvii) **Site:** means the land and/or other places, on or through which the Works are to be executed including any other lands or places which may be allotted for the purpose of the Contract.

(xviii) **Plant:** means machinery, apparatus and like intended to form or forming part of Works.

(xix) **Base Date**: means the Date 28 days prior to the latest date of submission of the Tender.

(xx) **Party:** means the Employer or the Contractor as the context requires.

CLAUSE-2: INTERPRETATIONS:

2.1 Words imparting the singular only shall also include the plural; he includes she and vice versa unless this is repugnant to the context. Unless specifically defined, words shall have normal meaning under the language of Contract.

2.2 Heading and marginal notes in these General Conditions shall not be deemed to form part thereof or be taken into consideration in the interpretation or construction thereof of the Contract.

2.3 Any error in description, quantity or price in Bill of Quantities or any omission there from shall not vitiate the Contract or release the Contractor from execution of the whole or any part of the Works comprised therein according to drawings and Specifications or from any of his obligations under the Contract.

2.4 Detailed drawings shall be followed in preference to small scale drawings (sketch drawings) and figured dimensions in preference to scaled dimensions. In the case of discrepancy between the Letter of acceptance issued by Employer, Special Conditions of Contract, Technical Specifications, General Conditions of Contract, the Tender Drawings and/or Bill of Quantities and other documents of Contract the following order of precedence shall prevail:

a) Agreement;

b) Letter of Acceptance;

c) Special Conditions of Contract;

d) General Conditions of Contract;

e) Bill of Quantities;

f) Technical Specifications;

g) Contractor's Bid;

h) Tender Drawings;

i) Safety Manual.

j) Any other document forming part of the Contract

~~CLAUSE-3: SECURITY DEPOSIT FOR PERFORMANCE:~~

~~3.1 The Security Deposit shall comprise of following~~

~~i) Performance Security Deposit to be furnished by the Contractor at the time of Award of Work.~~

~~(ii) Retention Money to be recovered from Running Account bills of the Contractor.~~

~~3.2 The Contractor within 28 (twenty-eight) days from the date of issue of Letter of Acceptance, shall furnish a Performance security deposit of 2% (two percent) of the Contract Price including additional Security Deposit for front loaded bid or bid with low rated items to be executed in the later part of contract period for due performance of contract, in any one of the following forms:~~

~~(a) Demand draft on any Nationalized/scheduled Bank of India in the name of Employer; or~~

~~(b) Bank Guarantee issued / confirmed from an Indian Nationalized/Scheduled Bank of India acceptable to Employer in the prescribed Proforma.~~

~~(c) Insurance Surety Bond issued / confirmed by Insurance Company registered in India under Insurance Act 1938 or as amended from time to time and approved by the Insurance Regulatory Development Authority of India (IRDAI) acceptable to Employer in the prescribed proforma.~~

~~If the contractor does not submit the performance security within the stipulated period due to any valid reason, Tender Inviting Authority may grant time extension for submission of performance security based on the request of contractor.~~

~~In case, the contractor does not submit performance security without a valid reason, the Employer shall impose simple interest @12% per annum on the full amount of applicable performance security (alongwith applicable taxes, if any) for the period of delay in submission of performance security. The interest on delayed period shall be calculated on pro rata basis for number of delayed days.~~

~~The interest accrued shall be payable by the Contractor within 14 days from the date of intimation by Tender Inviting Authority in form of Bank Demand Draft/ Banker Cheque in favour of 'NHPC Ltd', otherwise the same shall be recovered from any payment due or become due against bills / any other amount lying with NHPC.~~

~~The delayed submission of Performance Security by the Contractor shall be recorded in substantial completion and final completion certificates. Further, no claim for extension of time for completion period or any other type of claim on account of delayed submission of performance security shall be entertained.~~

~~If contractor fails to submit the Performance Security within 45 days (for the contracts having time for completion - upto 12 months) or 60 days (for the contracts having time for completion - more than 12 months) from the date of issue of Letter of Award (LOA), then following actions shall be taken against such Contractor:~~

~~i) The bidder shall be debarred / banned to participate in the business dealings with NHPC for a period of one year.~~
~~ii) The name of the Contractor shall be hosted on the NHPC website etc. as per existing norms of NHPC / Govt. of India.~~
~~iii) Such defaulted contractor shall not be eligible to participate in the bidding process of re-tender of this work.~~

~~3.3 Retention money shall be deducted by the Engineer-in-Charge from the interim bills of the Contractor **@ 3% (three percent)** of the total value of each bill of the work done (including those of price variation) towards Security Deposit.~~

~~3.4 If the Contractor expressly requests in writing, he will be permitted to convert the amount of Retention Money deducted from his interim bills into Bank Guarantee as per prescribed proforma.~~

~~3.5 All compensation or other sums of money payable by the Contractor to the Employer under the terms of this Contract or any other contract or on any other account whatsoever, may be deducted from Security Deposit. Also in the event of the contractor's Security Deposit being reduced by reasons of such deductions, as aforesaid, the Contractor shall, within 14 days of receipt of notice of demand from the Engineer-in-Charge, make good the deficit in Security Deposit.~~

~~3.6 Should there arise any occasion under the Contract due to which the periods of validities of Bank Guarantees / Insurance Surety Bond as may have been furnished by the Contractor from time to time, are required to be extended/renewed, the Contractor shall get the validity periods of such guarantees or bonds extended/renewed, and furnish these to the Engineer-in-Charge one month before the expiry date of the aforesaid Guarantees / Bonds originally furnished failing which the existing Bank Guarantees / Insurance Surety Bonds shall be invoked by the Engineer – in – charge. Also in case of any deficit in securities on any account as might occur or is noticed, the Contractor shall forthwith recoup/replace the same with acceptable Security Deposit.~~

~~3.7 Bank Guarantees / Insurance Surety Bonds as aforesaid shall be valid till 90 days beyond the date of issue of Defects Liability Certificate under the Contract (Clause 43). In case the bid of the successful Contractor is front loaded (i.e. the items which are to be executed in earlier part of construction period, are quoted high or low rated to be executed in the later part of contract period) in relation to the Employer's estimated rates for such~~

~~items, the Employer may require the Contractor to submit additional performance security in the form as stated above, to a level sufficient to protect against financial loss in the event of default of the successful Contractor under the Contract. The amount of the increased performance security shall be decided at the sole discretion of the Employer, which shall be final, binding and conclusive on the Contractor. The Bank Guarantee/Insurance Surety Bond for the additional performance security shall be valid up to completion of work under the scope of the contract.~~

~~CLAUSE-4: REFUND OF SECURITY DEPOSIT:~~

~~The Security Deposit less any amount due shall, on demand, be returned to the contractor after 30 days of issue of expiry of Defects Liability Period for Security Deposit as per GCC 3.1. However, the Security Deposit shall not be released till Liquidated Damages, if any, is pending for recovery. Additional Security Deposit for front loading shall be refunded within 30 days of completion of works. No interest on the amount of Security Deposit (including for the additional security for the front loaded bid) shall be paid to the Contractor at the time of release of Security Deposit.~~

(**Please refer to relevant SCC clause 16 & 17 with regard to clause 3 & 4 above**)

CLAUSE-5: SUFFICIENCY OF TENDER:

5.1 The Contractor shall be deemed to have satisfied himself as to the correctness and sufficiency of the Tender and of the rates and prices stated in the Schedule of Quantities and Prices all of which shall, except insofar as it is otherwise provided in the Contract, cover all his obligations under the Contract and all matters and things necessary for the proper execution and completion of the Works and the remedying of any defects therein.

5.2 If, however, during the execution of the Works the Contractor encounters on ground physical obstructions or physical conditions, other than climatic conditions on the Site, which obstructions or conditions were, in his opinion, not foreseeable by an experienced Contractor, the Contractor shall forthwith give notice thereof to the Engineer-in-Charge. Physical obstruction or conditions shall mean physical ground conditions existing at site and does not include man made conditions as well as climate conditions. On receipt of such notice, the Engineer-in-Charge shall, if in his opinion such obstructions or conditions could not have been reasonably foreseen by an experienced contractor shall determine any extension of time to which the Contractor is entitled to under Clause 39.2 shall notify the Contractor accordingly, with approval of the Employer. Such determination shall take account of any instruction which the Engineer-in-Charge may issue to the Contractor in connection therewith, and any proper and reasonable measures acceptable to the Engineer-in-Charge which the Contractor may take in the absence of specific instructions from the Engineer-in-Charge.

CLAUSE-6: CONTRACT DOCUMENTS:

6.1 One copy of Contract shall be kept by the contractor on the Site in good order and the same shall at all reasonable time be available for inspection and use by the Engineer-in-Charge, his representatives or by other Inspecting Officers.

6.2 None of these Documents shall be used by the Contractor for any purpose other than that of this contract.

CLAUSE 7: BREAKDOWN OF LUMP SUM ITEMS

For the purposes of statements submitted in accordance with Sub-Clause 45, the Contractor shall submit to the Engineer-in-Charge, a breakdown for each of the lump sum items contained in the Tender. Such breakdowns shall be subject to the approval of the Engineer-in-Charge

CLAUSE 8: DUTIES AND POWERS OF ENGINEER-IN-CHARGE'S REPRESENTATIVE:

8.1 The duties of the representative of the Engineer-in-Charge are to watch and supervise the works and to test and examine any materials to be used or workmanship employed in connection with the works.

8.2 The Engineer-in-Charge may, from time to time in writing, delegate to his representative any of the powers and authorities, vested in the Engineer-in-Charge and shall furnish to the Contractor a copy of all such written delegation of powers and authorities. Any written instruction or written approval given by the representative of the Engineer-in-Charge to the contractor within the terms of such delegation shall bind the Contractor and the Employer as though it has been given by the Engineer-in-Charge.

8.3 Failure of the representative of the Engineer-in-Charge to disapprove any work or materials shall be without prejudice to the power of the Engineer-in-Charge thereafter to disapprove such work or materials and to order the pulling down, removal or breaking up thereof. The Contractor shall, at his own expense, again carry out such works as directed by the Engineer-in-Charge.

8.4 If the Contractor is dissatisfied with any decision of the representative of the Engineer-in-Charge, he will be entitled to refer the matter to the Engineer-in-Charge who shall thereupon confirm, reverse or vary such decision and the decision of the Engineer-in-Charge in this regard shall be final and binding on the contractor.

8.5 Engineer shall act in accordance with the Contract

Any consultation that the Engineer holds with the Employer in pursuant to the Contract shall be entirely an internal matter between the Engineer and the Employer. The recommendations and determinations by the Engineer are subject to review and finalization by the employer. The same shall not be subject to matter of reference either by the Contractor or any arbitral tribunal. The Employer shall nominate one of its employees as Engineer. The Engineer shall obtain the specific approval of the Employer before taking action under the following Sub-Clauses of GCC and these Conditions:

(a) consenting to the subletting of any part of the Works; under Clause 9;
(b) determining an extension of Time for Completion under Clause 39;
(c) evaluation of deviations under Clause 18;

(d) determination of idling cost under clause 5.2, 12.2, 15.4, 35.1:
(e) payment pursuant to subsequent legislation under Clause 47.2 of GCC;
(f) notwithstanding the obligation, as set out above, to obtain approval, if, in the opinion of the Engineer, an emergency occurs affecting the safety of life or of the Works or of adjoining property, he may, without relieving the Contractor of any of his duties and responsibility under the Contract, instruct the Contractor to execute all such work or to do all such things as may, in the opinion of the Engineer, be necessary to abate or reduce the risk. The Contractor shall forthwith comply, despite the absence of approval of the Employer, with any such instruction of the Engineer.

CLAUSE 9: ASSIGNMENT AND SUB-LETTING:

The Contractor shall not sub-let/sub-contract, transfer or assign the whole or any part of the work under the Contract. Provided that the Engineer-in-Charge may, at his discretion, approve and authorize the Contractor to sub-let any part of the Work, which, in his opinion, is not substantial, after the Contractor submits to him in writing (at least 21 days before the contractor intends to sublet part of the work) the details of the part of the work(s) or trade proposed to be sublet, the name of the sub-contractor thereof together with his past experience in the said work/trade and the form of the proposed sub-contract. Nevertheless, any such approval or authorization by the Engineer-in-Charge shall not relieve the Contractor from his any or all liabilities, obligations, duties and responsibilities under the Contract. The Contractor shall also be fully responsible to the Employer for all the acts and omissions of the sub-contractor, his employees and agents or persons directly employed by the Contractor. However, the employment of piece-rate workers and purchase of material shall not be construed as sub-letting. Request for sub- contracting shall contain.

a) Contractor's certification regarding the financial soundness of the proposed Sub-contractor for the work;
b) its scope and estimated value in relation to the Contract Price;
c) experience of the Sub-contractor, in the related areas of work;
d) the manpower, equipment, material and other resources available with the Sub-contractor for the work;
e) domicile of the Sub-contractor and particulars of its other existing operations or contracts if any, in India.

CLAUSE-10: FACILITIES TO OTHER CONTRACTORS:

10.1 The Contractor shall, in accordance with the requirements of the work as decided by the Engineer-in-Charge, afford all reasonable facilities to other contractors engaged contemporaneously on separate contracts and for departmental labor and labor of any other properly authorized authority or statutory body which may be employed at the site for execution of any work not included in the Contract or of any contract which the Employer may enter into in connection with or ancillary to

the works. In all matters of conflict of interest, the
Engineer-in-Charge shall direct what compromise should be made and his decision shall be final and binding on the parties.

10.2 If, however, pursuant to Sub-Clause 10.1 the Contractor shall, on the written request of the Engineer-in- Charge:

(a) make available to any such other contractor, or to the Employer or any such authority, any roads or ways the maintenance of which is the responsibility of the Contractor,

(b) permit the use, by any such, of temporary facilities or Contractor's Equipment on the Site, or

(c) provide any other service of whatsoever nature for any such,

the Engineer-in-Charge shall determine the payment admissible to the Contractor at the cost of other contractors or Employer as the case may be.

CLAUSE-11: CHANGES IN CONSTITUTION:

Where the Contractor is a partnership firm, prior approval in writing of the Engineer-in-Charge shall be obtained before any change is made in the constitution of the firm. Where the Contractor is an individual or a Hindu undivided family business concern, such approval, as aforesaid, shall likewise be obtained before the Contractor enters into any partnership firm which would have the right to carry out the work undertaken by the Contractor. If prior approval as aforesaid is not obtained, the Contract shall be deemed to have been assigned in contravention of Clause 38 hereof and the same action will be taken and the same consequences shall ensure as provided for in the said Clause 38.

CLAUSE-12: POSSESSION AND USE OF SITE:

12. 1 Save insofar as the Contract may prescribe:

(a) the extent of portions of the Site of which the Contractor is to be given possession from time to time,

(b) the order in which such portions shall be made available to the Contractor, and, subject to any requirement in the Contract as to the order in which the Works shall be executed, the Engineer in charge will give to the Contractor possession of so much of the Site, and such access as in accordance with the Contract, is to be provided by the Engineer as may be required to enable the Contractor to commence and proceed with the execution of the Works in accordance with the programme referred to in Clause 14, if any, and otherwise in accordance with such reasonable proposals of the Contractor. The Engineer will, from time to time as the Works proceed, give to the Contractor possession of such further portions of' the Site as may be required to enable the Contractor to proceed with the execution of the Works in accordance with such programme or proposals, as the case may be.

12.2 If the Contractor suffers delay from failure on the part of the Engineer in charge to give possession in accordance with the terms of Sub-Clause 12.1, the Engineer-in-Charge shall, determine any extension of time to which the Contractor is entitled under Clause 39 and shall notify the Contractor accordingly, with approval of the Engineer in charge. The contractor shall be responsible to arrange the land for Contractor's infrastructure works namely field office(s), colony, workshop(s), stores, magazines for explosives in isolated locations, assembly-yard, and access thereto over routes as may be required for execution of the Works at his own cost and Engineer in charge shall not be responsible for making available the same.

12.3 The Contractor shall provide at his own cost all temporary pathways/roads required at site or to quarries or borrow areas and shall alter, adopt and maintain the same as required from time to time and shall bear all expenses and charges for special or temporary way leaves required by him in connection with access to the site and shall take up and clear them away and make good all damages done to the site as and when no longer required and as and when ordered by the Engineer-in-Charge. The Contractor shall also obtain at his risk and cost, any additional facilities outside the site which he may require for the purpose of the Works.

12.4 The Contractor shall not interfere unnecessarily or improperly with:

a) the convenience of the public, or .
b) the access to and use and occupation of all roads and footpaths, irrespective of whether they are public or in the possession of the Engineer in charge or of others.

The Contractor shall indemnify and hold the Employer harmless against and from all damages, losses and expenses (including legal fees and expenses) resulting from any such unnecessary or improper interference.

12.5 The Contractor shall be deemed to have been satisfied as to the suitability and availability of access routes to the Site. The Contractor shall use reasonable efforts to prevent any road or bridge from being damaged by the Contractor's traffic or by the Contractor's Personnel. These efforts shall include the proper use of appropriate vehicles and routes.

12.6 To transport the goods, unless otherwise stated:

a) the Contractor shall give the Engineer not less than 21 days' notice of the date on which any Plant or a major item of other Goods will be delivered to the Site,

b) the Contractor shall be responsible for packing, loading, transporting, receiving unloading, storing and protecting all Goods and other things required for the Works, and

c) the Contractor shall indemnify and hold the Employer harmless against and from all damages, losses and expenses (including legal fees and expenses) resulting from the transport of Goods, and shall negotiate and pay all claims arising from their transport.

If it is found necessary for the Contractor to move one or more loads of Goods over roads, highways, bridges on which such oversized and overweight items are not normally allowed to

be moved, the Contractor shall

obtain prior permission from the concerned authorities. Payments for complying with the requirements, if any, for protection of or strengthening of the roads, highways or bridges shall be made by the Contractor and such expenses shall be deemed to be included in the Contract Price.

Further, the Contractor shall comply with Carriage by Road Act 2007 & Carriage by Road Rules 2011 notified on 28.02.2011. The Contractor shall use only registered common carriers for transport of goods.

~~CLAUSE-13: ADVANCES AND RECOVERY THEREOF:~~

~~**13.1** Financial assistance in the shape of recoverable advance on written request from the Contractor, may be provided to the Contractor for augmenting/supplementing his resources in the manner indicated hereunder.~~

~~13.1.1 Advances for Initial Mobilisation, Preliminary, Enabling and Ancillary Works~~

~~Interest bearing Advance upto a maximum of.....(as mentioned in Schedule D) of the Contract Price may~~
~~be given to the Contractor for his preliminary mobilization, subject to the following conditions:~~

~~(i) The advance shall bear simple interest @ percent per annum (as mentioned in Schedule 'D'). The monthly interest shall be calculated on outstanding balance of advance on the last day of the previous calendar month. However, for calculation of interest for the month, in which such advance has been released, the period from the day of release of advance up to the last day of the calendar month (both days inclusive) shall be considered. Similarly, for calculation of interest for the month, in which such advance is fully repaid, the period from 1st day of the calendar month upto the day of repayment of final installment of advance shall be considered.~~

~~(ii) Initially a lump sum advance upto_____percent (refer Schedule D)of the Contract Price, shall be paid within one month of the signing of the agreement and on Contractor's furnishing the requisite Bank Guarantee on the approved form incorporated in the contract from a Nationalized Bank or a Scheduled Bank in India.~~

~~(iii) The balance advance shall be released upon mobilization of resources at site on production of utilization certificate by the Contractor and on the satisfaction of the Engineer-in-charge and on furnishing the requisite Bank Guarantee from an Nationalised or Scheduled Bank.~~

~~(iv) The Bank Guarantee so furnished shall be for amount equal to 1.1 times (110%) of the advance and shall be valid till the said advance alongwith interest there upon has been fully recovered, but the amount thereof shall be progressively reduced by the amount repaid by the Contractor as indicated in Interim Payments. Should there arise any occasion under the Contract due to which the period of validities of such Bank Guarantees, are required to be extended or the same be renewed, the Contractor at his own cost shall get the validity period of such guarantees extended or the same be renewed, as the case may be, and furnish the~~

~~same to the Engineer-in-Charge before the due expiry date of the aforesaid guarantees failing which the Engineer-in-Charge shall be at liberty, to invoke the existing Bank Guarantee or to withhold the~~

~~payments of the Interim bills till such time the amount of outstanding advance including interest thereupon is fully recovered.~~

~~(v) The recovery of advance shall start after the Contractor has received a gross payment equivalent to 10% of Contract Price and shall be effected on pro-rata basis to the gross value of work billed in such a way that the full advance with interest thereupon is recovered by the time 90% of the Contract Price is paid.~~

~~The interest shall be calculated on the outstanding amount of principal at the close of each month. The recovery of interest shall be started when the Contractor has received a gross payment equivalent to 5% of the Contract Price and interest as accrued/accruing till the time 10% of Contract Price is paid shall be recovered in suitable instalments in such a way that the above said accrued interest is fully recovered by the time the Contractor receives a gross payment equivalent to 10% of the Contract Price and thereafter the interest as may be due on 1st of each month will be recovered from the Running Account bills of the Contractor to be paid during that month. Recoveries will first be credited to interest due and residual applied to the principal.~~

~~13.1.2. ADVANCE FOR CONSTRUCTION EQUIPMENT:~~

~~Interest bearing advance up to a maximum of ..... percent (refer Schedule 'D') of the Contract Price will be~~

~~paid to the contractor against Bank Guarantee for procurement of new Construction Equipment subject to the following conditions:~~

~~i) The advance shall bear simple interest @..... percent per annum (as mentioned in Schedule `D') The~~

~~monthly interest shall be calculated on outstanding balance of advance on the last day of the previous calendar month. However, for calculation of interest for the month, in which such advance has been released, the period from the day of release of advance up to the last day of the calendar month (both days inclusive) shall be considered. Similarly for calculation of interest for the month, in which such advance is fully repaid, the period from 1st day of the calendar month upto the day of repayment of final installment of advance shall be considered.~~

~~The Bank Guarantee so furnished shall be for amount equal to 1.1 times of the advance and shall be valid till the said advance along with interest there upon has been fully recovered, but the amount thereof shall be progressively reduced by the amount repaid by the Contractor as indicated in Interim Payments. Should there arise any occasion under the Contract due to which the period of validities of such Bank Guarantees, are required to be extended or the same be renewed, the Contractor at his own cost shall get the validity period of such guarantees extended or the same be renewed, as the case may be, and furnish the same to the Engineer-in-Charge before the due expiry date of the aforesaid guarantees failing which the Engineer-in-Charge shall be at liberty, to invoke the existing Bank Guarantee or to withhold the payments~~

~~of the Interim Payment till such time the amount of outstanding advance including interest thereupon is fully recovered.~~

~~ii) The Construction Equipment, as are required for the actual execution of the works Construction Equipment must reach the Site before release of advance payment.~~

~~Further provided that Advance for Construction Equipment shall be released only after signing of agreement and submission of Performance Security as per Clause 3.2.~~

~~iii) The Construction Equipment for which the advance is to be granted shall be of unencumbered ownership of the Contractor. The Contractor shall also get such Construction Equipment insured under CPM Policy in the joint name of the Contractor and the Employer for full value against all risks at his cost. The insurance policy shall be valid till such time the advance is recovered/repaid in full.~~

~~The Insurance Policy shall be deposited by the Contractor with the Engineer-in-Charge before the advance is released.~~

~~iv) Subject to the maximum limit fixed for such advances as above and conditions thereto, the advance shall be granted to the extent of 90% of the cost of new Construction Equipment purchased by him duly supported by due proof of payment, purchase vouchers and other connected documents. The advance can be taken by the contractor at any time during the contract subject to condition that full advance is recovered by the time 90% of Contract price is paid .~~

~~v) In case the Contractor desires to shift any such Equipment from the Site of Work, he shall do so with the written permission of the Engineer-in-Charge and after repaying the outstanding advance of that particular Equipment.~~

~~vi) The recovery of principal shall start after the Contractor has received a gross payment equivalent to 10% of Contract Price and shall be effected on pro-rata basis to the gross value of work billed in such a way that the full advance is recovered by the time 90% of the Contract Price is paid.~~

~~The interest shall be calculated on the outstanding amount of principal at the close of each month. The recovery of interest shall be started when the Contractor has received a gross payment equivalent to 5% of the Contract Price and the interest as accrued/accruing till the time 10% of the Contract Price is paid shall be recovered in suitable installments in such a way that the above said accrued interest is fully recovered by the time the Contractor receives a gross payment equivalent to 10% of Contract Price and thereafter the interest as may be due on 1st of each month will be recovered from the Running Account bills of the Contractor to be paid during that month. Recoveries will first be credited to interest due and residual applied to the principal.~~

~~vii) The cost of the new Equipment for the purpose of this clause shall mean the cost as invoiced by the suppliers of the Construction equipment, inclusive of taxes and duties.~~

~~In respect of imported equipment, C.I.F. cost plus customs duty shall be deemed to be the~~

~~cost of Equipment for the purpose of this clause.~~

~~**13.2** The gross value of work billed/gross payment shall mean to include payment towards scheduled items, extra items, varied items, substituted items, altered items and price escalation bills for the purpose of this clause.~~

CLAUSE-14: COMMENCEMENT OF WORK:

14.1 The Contractor shall commence the Work(s) immediately after the issue of Letter of Acceptance and shall proceed with the same with the expedition and without delay as may be expressly sanctioned or ordered by the Engineer-in-charge. If the Contractor commits default in the commencement of work within 30 days of issue of Letter of Acceptance, the Engineer-in-Charge shall without prejudice to any other right or remedy be at liberty to cancel the Contract and forfeit the earnest money/Performance Guarantee.

14.2 The Contractor shall submit along with his tender, the construction planning, phasing & sequence of construction, time & progress chart within the framework of construction schedule, i.e. Schedule `E' for achieving the completion targets of Work(s) as a whole and also of each group/sub- group of work(s) as stipulated in Schedule `E', showing the order or procedure and a statement showing the method and techniques of construction by which the contractor proposes to carry out the Works. Such charts or programme shall be prepared in direct relation to the construction schedule i.e. schedule `E' as well as the time stated in the Contract for completion of part of Works stipulated in Schedule `C'. It shall indicate the commencement and completion of various trades or sections of the Works, distribution and balancing of work-load pertaining to construction activities in various structures/component parts of Works into working seasons duly taking into account working months available in each working season and number of working days available for working months, to arrive at seasonal monthly average and seasonal monthly peak progress with corresponding time periods.

Contractor shall follow such an agreed planning & scheduling. However, Contractor shall not be relieved from any of his duties, obligations or responsibilities under the Contract.

14.3 Within one month of issue of Letter of Acceptance, the Contractor shall submit, to Engineer for his consent Master Control Network including but not limited to comprehensive bar chart stipulating quantities of work to be executed supported by machinery deployment schedule for the execution of Works within the overall time frame included in the schedule incorporated in the Contract.

14.4 During the execution of Works, if it appears to the Engineer in-charge, that actual progress of works does not conform to the programme consented by him Engineer- in charge under sub-clause 14.3 above, the Contractor shall produce a revised programme dealing modifications to such programme necessary for ensuring completion of works within Time for Completion.

14.5 The Contractor shall provide a detailed month-wise cash flow estimate at the beginning of each financial year duly revised at quarterly intervals if required so by the Engineer- in – charge.

14.6 The submission to and consent by the Engineer-in-charge of such programmes or the provision

of such general descriptions or cash flow estimates shall not relieve the Contractor of any of his duties or responsibilities under the Contract.

CLAUSE-15: WORKS TO BE CARRIED OUT IN ACCORDANCE WITH SPECIFICATIONS, DRAWINGS AND ORDERS, ETC:

15.1 The Contractor shall execute the Works in the most substantial and workmanlike manner and both as regards material and otherwise in every respect in strict conformity with the Specification. The Contractor shall also conform exactly, fully and faithfully to the designs, drawings, Specifications and instructions in writing in respect of the work, duly signed by the Engineer-in-Charge issued from time to time. The Contractor shall take full responsibility for the adequacy of all the site operations and methods of construction.

The Contractor shall give prompt notice to the Engineer-in-Charge, with a copy to the Employer, of any error, omission, fault or other defect in the design of or Specifications for the Works which he discovers when reviewing the Contract or executing the Works.

15.2 The Contractor shall be entitled to receive, the documents set forth herein during the performance of the Contract:

a.	Construction drawings and revisions thereto	3 sets
b.	Specifications or revisions thereof other than printed Specifications.	2 sets standard
c.	Explanations, instructions etc.	1 copy

Such further drawings, explanations, modifications and instructions, as the Engineer-in-Charge may issue to the Contractor from time to time in respect of the Work, shall be deemed to form integral part of the Contract and the Contractor shall to carry out the Work accordingly.

15.3 The Contractor shall give notice to the Engineer-in-Charge, (at least 21 days in advance) whenever planning or execution of the Works is likely to be delayed or disrupted unless any further Construction Drawing or instruction is issued by the Engineer-in-Charge within a reasonable time. The notice shall include details of the Construction Drawing or instruction required and of why and by when it is required and of any delay or disruption likely to be suffered if it is late.

15.4 If, by reason of any failure or inability of the Engineer-in-Charge to issue, within a time reasonable in all the circumstances, any drawing or instruction for which notice has been given by the Contractor in accordance with Sub-Clause 15.3, the Contractor suffers delay then the Engineer-in-Charge shall, after approval of the Employer determine any extension of time to which the Contractor is entitled under Clause 39 and shall notify the Contractor accordingly, with approval of the Employer.

CLAUSE-16: SETTING OUT THE WORKS:

16.1 The Engineer-in-Charge shall establish/indicate the Bench Marks and convey the same in writing to Contractor immediately after Letter of Acceptance. Engineer in-charge shall be responsible for correctness of such data / bench marks conveyed to the Contractor.

16.2 The Contractor shall be responsible for the true and proper setting out of all the work (in relation to the afore-mentioned Bench Marks) for the correctness of the location, grades, dimensions and alignment of all components of the work; and for the provisions of all instruments, appliances, materials and labor required in connection therewith. If at any time during the progress of Works, any error shall appear or arise in the location, grades, dimensions, or alignment of any part of the Works, the Contractor on being required to do so by the Engineer-in-Charge shall, subject to Clause 16.1 hereof, at his own expense, rectify such error to the satisfaction of the Engineer-in-Charge.

16.3 The Contractor shall afford all reasonable facilities and assistance to the Engineer-in-Charge for checking the setting out and lines and grades established by the Contractor. The checking of any setting out or of any line and grade by the Engineer-in-Charge shall not in any way relieve the contractor of his responsibility for the correctness thereof.

CLAUSE-17: URGENT WORKS:

Urgent works means any urgent measures, which in the opinion of the Engineer-in-Charge, become necessary at the time of execution and/or during the progress of work to obviate any risk of accident or failure or to obviate any risk of damage to the structure, or required to accelerate the progress of work or which become necessary for security or for any other reason the Engineer-in-Charge may deem expedient.

If any urgent work (in respect whereof the decision of the Engineer-in-Charge shall be final and binding) becomes necessary, the Contractor shall execute the same as may be directed.

CLAUSE-18: DEVIATIONS:

18.1 The Engineer-in-Charge shall have powers to make any deviations in the original specifications or drawings or designs of the works or any part thereof that are, in his opinion, necessary at the time of or during the course of execution of the Works. For the aforesaid purpose or for any other reason, if it shall, in the opinion of the Engineer-in-Charge, be desirable, he shall also have the powers to make Deviations, such as (i) Variations in BOQ quantities (ii) Extra and (iii) Alterations or Substitutions of any kind. No such Deviations in the Specifications or Bill of Quantities, as aforesaid, shall in any way vitiate or invalidate the Contract and any such Deviations which the Contractor may be directed to do shall form integral part of the Contract as if originally provided therein and the Contractor shall carry out the same on the same terms & conditions in all respects on which he agreed to do the works under the contract subject to clause 18.2 ibid.

18.2 The rates for such items of work as are required to be executed due to Deviations, as stated in sub-clause 18.1 above shall be payable in the manner as stated hereunder

a) (i) this item is not specified in the Contract as a "fixed rate item"

(ii) this variation in quantity (in respect of BoQ quantity) multiplied by such specified (BoQ) rate for this item exceeds 0.25% of the Accepted Contract Amount, and

(iii) the measured quantity of the item varies by more than 25% from the quantity of this item in the Bill of Quantities or other Schedule,

The rates already provided in the Bill of Quantities, shall apply in respect of the same item(s) of work to be executed due to Variation, in respect of quantities of individual items appearing in the Bill of Quantities.

In case of items for which rates are not available in the Bill of Quantities, the rates of such items as far as practicable shall be derived from the rates of analogous item(s) in the Bill of Quantities after submission of details by the Contractor on actual observance at Site. The decision to select analogous item(s) shall be taken by the Engineer, which shall be conclusive and binding on the Contractor.

In the cases, where analogous items are not available in the Bill of Quantities, such items shall be termed as extra item and the rates for such items and also for items exceeding the prescribed limits as mentioned in Sub Para (a) above due to increase in quantity(ies), the Contractor, within 15 days (or as agreed by the Engineer) from the receipt of order to execute such items shall submit rate analysis to the Engineer supported by documentary evidence of basic rates adopted therein, notwithstanding the fact that the rates for such items exist in the Contract; having regard to the cost of Materials, actual wages of labor and ownership & operational cost of Construction Equipment required as per standard norms or if standard norms are not specified/available then on the basis of labor/Materials/Construction Equipment actually engaged for the particular work. The Engineer-in-Charge shall within 16 weeks of receipt of the such request supported by analysis, after giving consideration to the analysis of the rates submitted by the contractor, determine the rates based on the norms as mentioned in this clause. The standard norms for including indirect charges for labor and Materials specified herein shall mean as those specified in "Guidelines for preparation of Project Estimates for River Valley Projects (latest version)" of Central Water Commission, Govt. of India, and if not available therein, then those of State's Public Works Department. Standard norms for Construction Equipment use shall mean those of Bureau of Indian Standards (IS : 11590 : 1995 – latest version) and if not available therein, then those specified in "Guidelines for preparation of Project Estimates for River Valley Projects (latest version)" of Central Water Commission, Govt. of India.

Over and above the cost of labor, Materials arranged by the Contractor and ownership & operational cost of Construction Equipment, an element of 20% shall be allowed to cover the Contractor's overheads, profits, and supervision charges.

However, for materials issued by the Employer to the Contractor and/or Construction Equipment supplied on rental charge(s) by Employer to the Contractor during the course of execution of Works, the Contractor shall be entitled to only 10% (ten percent) of such costs to cover local transportation / handling, overheads, supervision, profits etc.

The new rate derived as above shall be payable only for the quantities in excess of 125% (one hundred twenty five percent) of BOQ quantities as worked out after meeting conditions (ii) and (iii) at para (a) above

For items exceeding the prescribed limits as mentioned in sub para (a) above due to decrease in quantity (ies), compensation equivalent to 20% of the amount derived by multiplying (BOQ rate plus applicable escalation on the date of completion of whole of the work) by the quantities decreasing in excess of 25% of the BOQ shall be paid.

Illustration:

Prescribed limit 25%

Quantities executed 70%

Quantity admissible for compensation = 5% {i.e (100% - 70% - 25%) subject to prescribed limits as mentioned in sub para (a) above.}

Amount admissible = 20% of {5% of quantity x (BoQ rate + applicable escalation on the date of completion of whole of the work)}

The compensation for negative deviations shall not be applicable if the item has been substituted.

The Engineer-in-Charge shall examine the rate analysis submitted by the Contractor and fix the rates accordingly whose decision shall be conclusive, final and binding on the Contractor.

18.3 If requested by the Contractor, the Time for Completion of the Works shall, in the event of any deviation resulting in additional cost over the Contract Price, be extended in the proportion which the Deviation bears to the Contract Price plus such further additional time as may be considered reasonable by the Engineer-in- Charge and shall notify the Contractor accordingly.

18.4 Under no circumstances, the Contractor shall suspend the work on account of non-settlement of rates of such Deviated items.

18.5 Provided that no deviations instructed to be done by the Engineer-in- charge pursuant to Clause 18.1 shall be valid under Clause 18.2 unless within 15 days of the date of such instruction before the commencement of execution of deviated items, notice shall have been given either ;

a) by the Contractor to the Engineer-in- charge of an intention to claim extra payment or varied rate or price or

b) by Engineer-in- charge to the Contractor of his intention to vary a rate or price for the deviated items.

18.6 No change in the rate or price for the any amount of variation in quantities for “Fixed Rate Items” items shall be considered for even if executed quantity of such item (s) varies beyond 25% of BOQ quantity. These “Fixed Rate Items” items are those whose rates are indicated by Employer in the BOQ.

CLAUSE-19: CONTRACTOR’S SUPERVISION:

19.1 The Contractor shall appoint at his own expense adequate number of engineers with sufficient experience to supervise the Works.

The contractor or his authorized representatives present at the Site shall superintend the execution of the Works with such additional assistance in each trade, as the work involved shall require and considered reasonable by the Engineer-in-Charge. Directions/instructions given by the Engineer-in-Charge to the Contractor's authorized representatives shall be considered to have the same force as if these had been given to the Contractor himself.

19.2 The Contractor shall communicate in writing to the Engineer-in-charge, the name of the accredited representative(s) who would be responsible for taking instructions from the Engineer-in-charge.

CLAUSE-20: INSTRUCTIONS AND NOTICES:

20.1 Except as otherwise provided in this Contract, all notices to be given on behalf of the Employer and all other actions to be taken on its behalf may be given or taken by the Engineer-in-Charge or any officer for the time being entrusted with the functions, duties and powers of the Engineer-in-Charge.

20.2 All instructions, notices and communications etc. under the Contract shall be given in writing and any such oral orders/instructions given shall be confirmed in writing and no such communication which is not given or confirmed in writing shall be valid. Further, if the Engineer in Charge or his representative gives an oral instruction and receives a written confirmation of the instruction from (or on behalf of) the Contractor within 2 working days after giving the instruction and Engineer in Charge does not reply by issuing a written rejection and/or instruction within 7 working days after receiving the confirmation then the confirmation shall constitute the written instruction of the Engineer in Charge or authorized representative as the case may be.

20.3 Either Party may change a nominated address to another address by prior notice to the other Party.

20.4 The Engineer-in-Charge shall communicate or confirm the instructions to the Contractor in respect of the execution of work in a `Work Site Order Book' maintained in the office of the Engineer-in-Charge or his representative and the Contractor or his authorized representative shall confirm receipt of such instructions by signing the relevant entries in this book. If required by the Contractor, he shall be furnished a certified true copy of such instruction(s).

~~**CLAUSE-21: CONSTRUCTION EQUIPMENT:**~~

~~21.1 The Contractor shall provide and install all necessary Construction Equipment required for the execution of the Works under the Contract, at his cost and shall use such methods and appliances for the purpose of all the operations connected with the Work covered by the Contract which shall ensure the completion of Work(s) within the specified Time for Completion.~~

~~21.2 The tenderer shall submit as per Schedule 'F', full details of Construction Equipment proposed to be deployed for the Work along with its planning schedule showing month wise phasing in accordance with the Construction schedule i.e. Schedule 'E'. The Schedule 'F' submitted by the tenderer should conform to the Construction Schedule i.e. Schedule 'E'.~~

~~The Contractor shall deploy Construction Equipment as per Schedule.~~

~~Provided further that in case of slow rate of progress of Works, the Contractor shall supplement the Schedule 'F' Equipment with additional Equipment so as to ensure completion of Works within Time for Completion at no extra cost to Employer.~~

21.3 The Contractor shall not remove Construction Equipment, except for purpose of removing it from one part of the Site to another, without written consent of the Engineer.

Provided always that any such approval of Construction Equipment schedule in 21.2 shall not absolve the Contractor of his obligations for due execution of the Works within the Time for Completion as per the Contract.

Subject to the availability of any of Employer's Equipment and at the written request of the Contractor, such, Equipment may be issued to the Contractor on hire for being deployed on the Work contracted for, at pre-determined rates, terms and conditions at the sole discretion of the Engineer-in-Charge.

CLAUSE-22: PATENT RIGHTS:

The Contractor shall indemnify the Employer, its representatives or its employees against any action, claim or proceedings relating to infringement or use of any patent or design or any alleged patent or design rights and shall pay any royalties or other charges which may be payable in respect of any article or material or part thereof included in the Contract. In the event of any claim being made or action being brought against the Employer or any agent, servant or employee of the Employer in respect of any such matters as aforesaid, the Contractor shall immediately be notified thereof. Provided that such indemnity shall not apply when such infringement has taken place in complying with the specific directions issued by the Employer, but the Contractor shall pay any royalties or other charges payable in respect of any such use, the amount so paid being reimbursed to the Contractor only if the use was the result of any drawings and/or specifications issued after submission of the tender.

CLAUSE-23: MATERIALS:

23.1 Subject to clause 31.2, the Contractor shall at his own expense provide/arrange all materials required for the bonafide use on Works under the Contract except those listed and specified in Schedule `B'. The quantity of such materials as stipulated in the aforesaid schedule to be issued by the Employer will be that as may be actually required for the work and shall be subject to the terms and conditions as set forth in the sub-clause 23.4 ibid.

23.2 All materials to be provided by the Contractor shall be in conformity with the Specifications laid down in the Contract and the Contractor shall furnish from time to time proof and samples, at his cost, of the materials as may be specified by the Engineer-in-Charge for his approval before use in the Works. The Engineer-in-Charge shall also have powers to have such tests, in addition to those specified in the Contract, as may be required and the Contractor shall carry out the same. The cost of materials consumed in such tests and also expenses incurred thereon shall be borne by the Contractor in all cases except when the materials are agreed to be issued by the Employer under the Contract and also where such tests which are in addition to those provided in the Contract.

23.3 The Contractor shall maintain an account of receipt and use of materials brought by Contractor for incorporation in the Works for the purpose of check and accounting and same shall be available for inspection of Engineer-in-charge.

The Engineer-in-Charge or his representative shall be entitled at any time to inspect and examine any materials intended to be used in or on the works, either on the site or at factory or workshop or other place(s) where such materials are assembled, fabricated, manufactured, or at any place where these are lying or from where these are being obtained. For this purpose, the Contractor shall afford such facilities as may be required for such inspection and examination.

~~23.4 For the materials listed in Schedule 'B', which the Employer has agreed to issue to the Contractor for use in the work under the Contract free of cost, the Contractor shall, before 90(ninety) days of the requirement in accordance with the agreed phased programme of the construction of work(s), send a requisition in writing to the Engineer-in-Charge. The issue of such materials shall be subject to the following terms and conditions:~~

~~(i) All materials issued by the Employer to the Contractor for use in the work shall vest in the Employer and the Contractor shall hold all such items of materials as mere custodian in trust on behalf of the Engineer- in-Charge.~~

~~(ii) All costs, such as loading, transportation, unloading, storage etc. whatsoever as may be required for the following activities shall be borne by the Contractor:~~

~~(a) from the place/point of issue by the Employer to the ultimate use for/in the works~~

~~and/or~~

~~(b) in connection with the return of materials by the Contractor to the Employer stores, wherever necessary under the provisions of the Contract.~~

~~(iii) The Contractor shall maintain an account of receipt and use of materials issued by the Employer each day and submit the same monthly to the Engineer-in-Charge in the form as may be prescribed by Engineer-in-Charge for the purpose of check and accounting. The Contractor shall also, from time to time, render proper account of all materials issued by the Employer.~~

~~(iv) CEMENT:~~

~~a) Cement will be issued to the Contractor in bags as received from the suppliers or by weight and will be consumed in work as per mix-design approved by the Engineer-in-Charge.~~

~~b) In case cement is issued by bags in numbers as received from the supplier(s) and consumed by weight, a variation of 3% (three percent) of the quantity of cement issued will be allowed to account for the difference between the quantity issued and that consumed.~~

~~c) The variation as mentioned in (b) above shall be considered as inclusive of all wastages on account of handling, rehandling, transportation, storage or any other account whatsoever as may be involved at any stage and such variation shall be to the Contractor's account. However, if the consumption of cement exceeds the aforesaid permissible limits, the recovery shall be effected for such excess quantity at the penal recovery rate(s) indicated in Schedule `B' from the Contractor.~~

~~v) STEEL:~~

~~a) Reinforcement steel~~

~~Reinforcement steel shall be issued to the Contractor on weighment basis. All untampered and cut pieces of 3(three) meter in length or more shall be returned by the Contractor to the Employer which shall be taken back on weighment basis and shall be duly accounted for against materials issued and will not be treated as wastage/scrap.~~

~~The consumption of reinforcement steel shall be accounted on sectional weight basis (based on linear measurement multiplied by corresponding unit weight as specified in relevant Technical Specifications). For calculation of theoretical consumption, reinforcement steel laid at site as measured for payment according to the bar-bending schedule including lappages as authorised by the Engineer- in-charge shall be taken into account. In addition to above, an allowance of 3% of above quantity shall be considered at Contractor's cost in theoretical consumption for chairs, pins and spacers, cut-pieces less than 3 mtrs, (non-returnable) rolling margin, scrap and wastage.~~

~~The difference between the reinforcement steel actually issued minus the credit given for the reinforcement steel returned and steel theoretically consumed as worked out in accordance with above, shall be recoverable at the penal recovery rate(s) specified in Schedule `B' from the Contractor.~~

~~The Contractor is deemed to have accounted for in his quoted price all variations arising on account of variation in the unit weight of manufactured sections and that specified in the Technical Specifications and no claim on account of any such variations shall be admissible.~~

~~**b) Structural steel**~~

~~Structural steel shall be issued to the Contractor on weighment basis. This shall be used by the Contractor most economically and strictly in accordance with the approved construction drawings or as per written instructions of the Engineer-in-Charge. All untampered pieces and cut pieces of 1 (one) meter in length or more and plates of size 1 (one) meter x 0.3 (point three) meter or more shall be returned by the Contractor to Employer which shall be taken back on weighment basis and shall be duly accounted for against material issued and will not be treated as wastage/scrap.~~

~~For calculation of theoretical consumption weight of finished product as measured for payment shall be considered. In addition to above, an allowance of 3% (three percent) of above measured quantity shall be considered at Contractor's cost in theoretical consumption to cover all wastages and the rolling margin.~~

~~The difference between the structural steel actually issued minus the credit given for the structural steel returned and the steel theoretically consumed as worked out in accordance with above shall be recoverable at the penal recovery rate specified in Schedule `B` from the Contractor.~~

~~The Contractor is deemed to have accounted for in his quoted price all variations arising on account of rolling margin/variation in the weight of manufacture sections and that specified in Technical Specification and no claim on account of any variation other than as specified above shall be admissible.~~

~~**(vi) Explosives, Detonators**~~

~~Explosives, Detonators etc. will be issued to the Contractor from the Employer magazine only after the contractor has constructed the magazine(s) or has arranged portable magazines, obtained license for storage and use of the same, arranged licensed blaster and complied with all the relevant provisions of Indian Explosives Act, 1940 with amendments thereto. Proper account of receipt & consumption shall be maintained on daily basis, which can be checked, by Engineer-in-Charge or his representative at any time.~~

~~(vii) All materials issued by the Employer shall be for the purpose of the Contract only. At the time of submission of interim payments, the Contractor shall properly account for the~~

~~materials issued to him to the satisfaction of the Engineer-in-Charge and certify that balance of materials issued is available at the site.~~

~~(viii) Materials issued by Employer as per Schedule `B' which are rendered surplus shall, on completion of the works or on foreclosure of work or cancellation of Contract, be promptly returned by the Contractor at his expense at the place from where the same was issued by the Employer. If the Contractor is advised to return such material at a place other than from where it was issued, the Contractor shall deliver the material accordingly and in that case, the Employer shall bear the extra charges, if any, on this account. Surplus stores and/or materials returned by the Contractor will be accounted for giving due regard to the condition of stores and/or material. In case the Contractor fails to return materials after accounting for the theoretical consumption plus authorized allowances/wastages specified in this clause Engineer-in- Charge shall be at liberty to effect recovery at penal recovery rates as specified in Schedule 'B'.~~

(ix) ~~The accounts in respect of all materials issued by Employer as indicated in Schedule 'B' shall be reconciled every year and the outcome of such reconciliation shall be jointly signed by the Engineer-in-Charge and the Contractor for accounting. On reconciliation, if it is found that the actual consumption exceeds the theoretical consumption including admissible allowances as specified in sub-Clause 23.4 (iv) & (v) above, the cost of such excess materials shall be recovered from the Running Account bills of the Contractor at the penal recovery rate(s) specified in Schedule 'B'.~~

23.5 The Engineer-in-Charge shall have full powers for removal of any or all materials brought to site by the Contractor, which are not in accordance with the Contract Specifications or samples, approved by him. Should the Contractor fail to remove the rejected materials, the Engineer-in-Charge shall be at liberty to have them removed by other means at the Contractor's cost. The Engineer-in-Charge shall have full power to procure other proper materials to be substituted at Contractor's costs.

~~23.6(a) If construction material like cement, steel, etc. are required by the Contractor for the bonafide use in his preliminary, enabling and ancillary works (relating to the works under the Contract) and if such materials are available and can be spared by the Employer, the Engineer-in-Charge may issue the same to the Contractor at the prevailing stock issue rates at the time of issue of material. For the purpose of this sub-clause the prevailing stock issue rates shall mean the cost of material to the Employer at the Project store plus 10% towards overhead thereupon.~~

~~(b) The issue of the materials as per the approved/finalized plans, programme/requirement shall be regulated with reference to the availability and depending on the priorities with respect to various other works of the Project, as may be fixed by the Engineer-in-Charge and the Contractor shall have no right or claim in this regard.~~

~~23.7 The Contractor shall take proper care of the materials issued by the Employer and shall protect the same from damage and weathering. The Contractor shall be solely responsible for the safety~~

~~of the materials issued by the Employer.~~

~~23.8 All materials issued by Employer shall not under any circumstances whatsoever be taken out of the project Site.~~

~~23.9 It may be clearly understood by the Contractor that any material not duly accounted for under the Contract either in the Contractor's store or returned to the Employer shall be treated as unaccounted material and recoveries for the same shall be made from the Running Account bills of the Contractor at the penal recovery rates indicated in schedule `B'.~~

~~23.10 Provisions contained hereinabove shall not in any way dilute the Contractor's liabilities under the Contract in any manner whatsoever.~~

CLAUSE-24: POWER SUPPLY:

24.1 The Employer, if requested by the Contractor will provide full assistance to the Contractor to obtain construction power from grid to meet part requirement as standby arrangement. Contractor will not have any claim, if construction power is not available from the grid. The Contractor will also be responsible for making all payments to the concerned authorities and will make no claims if the power is not available due to grid failure or otherwise. The Contractor shall make arrangements for the full anticipated requirement of construction power by installing Diesel Generating sets and operate these sets for generation of power required for execution of Works under the Contract, at no extra cost to the Employer.

24.2 No payment shall be made by the Employer for generation, distribution and consumption of electricity in execution of Works by the Contractor.

CLAUSE-25: SUPPLY OF WATER:

The Contractor shall make his own arrangements for water required for and in connection with the work at his cost. It shall be the responsibility of the Contractor to satisfy himself that the water arranged by him is fit for construction & consumption & he shall adequately treat such water whenever it is not found fit for the said purposes.

CLAUSE-26: WATCHING AND LIGHTING:

The Contractor shall provide and maintain at his expense all lights, guards, fencing and watching when and where necessary or as required by the Engineer-in-Charge for the protection of the works or for the safety and convenience of those employed on the works or the public.

CLAUSE-27: WORK DURING NIGHT OR ON SUNDAYS AND HOLIDAYS:

27.1 Subject to any provisions to the contrary contained in the Contract, the Contractor shall have the options to carry out the works continuously during night, Sunday or holidays, without any additional cost to Employer.

CLAUSE-28: SITE DRAINAGE, PROTECTION OF TREES AND PREVENTION OFNUISANCE:

28.1 The Contractor shall, throughout the execution and completion of the Works and remedying of any defects therein have full regard for the safety of all persons entitled to be upon the Site and keep the Site (so far as the same is under his control) and the Works (so far as the same are not completed or occupied by the Employer) in an orderly state appropriate to the avoidance of danger to such persons.

28.2 The Contractor shall endeavor to protect from damage, the trees marked by the Engineer-in-Charge at the site of work or in the lands licensed to him for use under the contract. Where necessary, the contractor shall provide at his expense temporary fencing to protect such trees. No tree shall be cut unless authorized by Engineer-in-Charge in writing to do so.

28.3 The Contractor shall at no time, cause or permit any nuisance on the site or cause any thing which shall cause unnecessary disturbance or inconvenience to the public in general and owners/tenants/occupants of adjacent properties.

CLAUSE-29: LABOUR:

29.1 The Contractor shall employ labor in sufficient numbers to maintain the required rate of progress and quality to ensure workmanship of the degree specified in the Contract. The Contractor shall not employ in connection with the works any person who has not completed fourteen years of age in terms of Child Labor (Prohibition and Regulation) Act 1986. The Contractor is encouraged, to the extent practicable and reasonable, to employ staff and labour with appropriate qualifications and experience from the region of the project. Unskilled labour shall be recruited from local region only.

29.2 The Contractor shall furnish and deliver fortnightly to the Engineer-in-Charge, a distribution return of the number and description by trades of the works of people employed on the works. The contractor shall also submit on the 4th and 19th of every month to the Engineer-in-charge a true statement showing in respect of the second half of the preceding month and the first half of the current month.

i) The accidents that occurred during the said fortnight showing the circumstances under which they happened and the extent of damage and injury caused by them, and

ii) The number of female workers who have been allowed maternity benefit as provided in the Maternity Benefit Act, 1961 or Rules made thereunder.

29.3 The Contractor including its subcontractor shall have the registration with EPFO and ESIC. Further all the workers deployed by Contractors or sub-contractors shall be members of

Provident Fund and should be given the Universal Account Number (UAN). The EPF and ESI contribution on the part of employer in respect of this contract shall be paid by the contractor.

The Contractor including its subcontractor shall ensure that the payment is being made to contract workers through bank and shall submit the account statement in respect of salary paid to workers if required by Employer. The Contractor including its subcontractor should produce the documentary proof of depositing the ESI & EPF to the concerned departments along with monthly bills.

29.4 During continuance of the Contract, the Contractor and his sub-contractors shall abide at all times by all existing labour enactments and rules made thereunder, regulations, notifications and bye laws of State or Central Government or local authority and any other labour law (including rules), regulations, bye laws that may be passed or notification that may be issued under any labour law in future either by the State or the Central Government or the local authority. The Contractor shall keep the Principal Employer indemnified in case any action is taken against the Principal Employer by the competent authority on account of contravention by the Contractor of any of the provisions of any Act or rules made thereunder, regulations or notifications including amendments. If the Principal Employer is caused to pay or reimburse, such amounts as may be necessary to cause or observe, or for non-observance of the provisions stipulated in the notifications/bye laws/acts/rules/regulations including amendments, if any, on the part of the Contractor, the Engineer/Principal Employer shall also have right to recover from the Contractor any sum required or estimated to be required for making good the loss or damage suffered by the Principal Employer.

The employees of the Contractor and his sub-contractor in no case shall be treated as the employees of the Principal Employer at any point of time.

Salient features of some of the major labour laws that are applicable to construction industry are given below.

(i) Employee Compensation Act 1923 or as amended.

The Act provides for compensation in case of injury or death by accident arising out of and during the course of employment.

(ii) Payment of Gratuity Act 1972

Gratuity is payable to an employee under the Act on satisfaction of certain conditions on separation if an employee has completed 5 years service or more or on death or on retirement or superannuation at the rate of 15 days wages for every completed year of service. The Act is applicable to all establishments employing 10 or more employees.

(iii) Employees PF and Miscellaneous Provision Act 1952 including FPS-71/EPS-95.

The Contractor is required to possess PF Code from the concerned Regional Provident

Fund Commission. The benefits payable under the Act are:

(a) Pension or family pension on retirement or death as the case may be.

(b) Deposit linked insurance on the death in harness of the worker.

(c) Payment of PF accumulation on retirement/death etc.

(iv) Maternity Benefit Act 1961 (Amended)

The Act provides for leave and some other benefits to women employees in case of confinement or miscarriage etc.

(v) Contract Labour (Regulation and Abolition) Act 1970 with Rules framed there under as amended.

The Act provides for certain welfare measures and wages to be provided by the Contractor to contract labour and in case the Contractor fails to provide, the same are required to be provided by the Principal Employer by Law and recover the same from the Contractor from any amount/monies due to him. The principal employer is required to take Certificate of Registration and the Contractor is required to take a License from the designated Officer. The Act is applicable to the establishments of contractor if they employ 20 or more contract labour.

(vi) Minimum Wages Act 1948 (Amended)

The Contractor is to pay not less than the Rate of Minimum Wages notified by the appropriate Government as per provisions of the Act.

(vii) Payment of Wages Act 1936 (Amended)

It lays down as to by what date the wages are to be paid, when it will be paid and what deductions can be made from the wages of the workers.

(viii) Equal Remuneration Act 1979

The Act provides for payment of equal wages for work of equal nature to male and female workers and not for making discrimination against Female employees in the matters of transfers, training and promotions etc.

(ix) Payment of Bonus Act 1965 and any further amendments thereof.

The Act is applicable to all establishments employing 20 or more workmen. The Act provides for payments of annual bonus subject to a minimum of 8.33 % of wages and maximum of 20 % of wages to employees drawing ₹ 21,000/- P.M. or less. The bonus to be paid to employees getting ₹ 7,000/- P.M. or above upto ₹ 21,000/- P.M. shall be worked out by taking wages as ₹ 7,000/- P.M. or the minimum wages for the scheduled employments as fixed by the appropriate Govt. whichever is higher. All amounts of Bonus are required to be paid within eight months of closing of financial year. The Act does not apply to certain establishments, classes of employees. The newly set up establishments

are exempted for five years in certain circumstances.

(x) Industrial Disputes Act 1947(Amended)

The Act lays down the machinery and procedure for resolution of industrial disputes, in what situations a strike or lock-out becomes illegal and what are the requirements for laying off or retrenching the employees or closing down the establishment.

(xi) Industrial Employment (Standing Orders) Act 1946 (Amended)

It is applicable to all establishments employing 100 or more workmen (employment size reduced by some of the States and Central Government to 50). The Act provides for laying down rules governing the conditions of employment by the Contractor on matters provided in the Act and get the same certified by the designated Authority.

(xii) Trade Unions Act 1926

The Act lays down the procedure for registration of trade unions of workmen and employers. The trade unions registered under the Act have been given certain immunities from civil and criminal liabilities.

(xiii) Child Labour (Prohibition and Regulation) Act 1986

The Act prohibits employment of children below 14 years of age in certain occupations and processes and provides for regulation of employment of children in all other occupations and processes. Employment of child labour is prohibited in Building and Construction Industry.

(xiv) Inter-State Migrant Workmen's (Regulation of Employment and Conditions of Service) Act 1979

The Act is applicable to an establishment, which employs 5 or more inter-state migrant workmen through an intermediary (who has recruited workmen in one state for employment in the establishment situated in another state). The inter-state migrant workmen, in an establishment to which this Act becomes applicable, are required to be provided certain facilities such as housing, medical aid, traveling expenses from home upto the establishment and back, etc.

(xv) The Building and Other Construction Workers (Regulation of Employment and Conditions of Service) Act 1996 and the Cess Act of 1996

All the establishments who carry on any building or other construction work and employs 10 or more workers are covered under this Act. All such establishments are required to pay cess @ 1%of the cost of construction. The Contractor to whom the Act applies has to obtain a registration certificate from the Registering Officer appointed by the Government.

(xvi) The Factories Act 1948

The Act lays down the procedure for approval of plans before setting up a factory, health and safety provisions, welfare provisions, working hours, annual earned leave and rendering information regarding accidents or dangerous occurrences to designated authorities. It is applicable to premises employing 10 persons or more with aid of power or 20 or more persons without the aid of power engaged in manufacturing process.

(xvii) The Personal Injuries (Compensation Insurance) Act, 1963 and any modifications thereof and rules made there under from time to time.

(xviii) Employees' State Insurance Act, 1948:

The Act provides for certain benefits to employees in case of sickness, Maternity and Employment injury and for certain other matter in relation thereto.

The compliance of the labour laws/acts shall be along with amendments (if any) of the respective acts.

The Contractor shall require his employees to obey all applicable Laws, including those concerning safety at work.

The definition of 'Principal Employer' for this Clause shall be as per Contract Labour (Regulation and Abolition) Act 1970.

29.5 The Engineer-in-Charge shall on a report having been made by an authorized Inspecting Officer as defined in the Contract Labour (Regulation and Abolition) Act and Rules or on his own in his capacity as Principal Employer, have the power to deduct from the amount due to the Contractor any sum required or estimated to be required for making good the loss suffered by worker(s) by reasons of non-fulfilment of the conditions of the Contract for the benefit of workers, non-payment of wages or of deductions made by him from wages which are not justified by the terms of the contract or non-observance of the relevant Acts and Rules with amendments made from time to time. If the Employer makes payment to Contractor's labour due to non- payment of wages to labour by the Contractor, the Employer shall recover the amount thus paid from the next Interim Payment of the Contractor.

29.6 The Contractor shall indemnify the Employer against any payments to be made under and for observance of the Regulations, Laws, Rules as stipulated in clause 29.4 above without prejudice to his right to claim indemnity from his sub-contractors. In the event of the Contractor's failure to comply with the provisions of sub-clause 29.4 or in the event of decree or award or order against the Contractor having been received from the competent authority on account of any default or breach or in connection with any of the provisions of sub-clause 29.4 above, the Engineer-in-Charge, without prejudice to any other right or remedy under the Contract, shall be empowered to deduct such sum or sums from the bills of the Contractor or from his Security Deposit or from other payments due under this contract or any other Contract to satisfy within a reasonable time the provisions of the various Acts/Laws/Rules/Codes as mentioned under sub-clause 29.4 above, on the part of the Contractor under the Contract on behalf of and at the expenses of the Contractor and make payment and/or provide amenities/facilities/services accordingly. In this regard, the decision of the Engineer- in-Charge shall be conclusive and binding on the contractor.

29.7 The Contractor shall at his own expense comply with or cause to be complied with the Provisions/Rules provided for welfare and health of Contract Labour in the Contract Labour (Regulation & Abolition) Act and other relevant Acts and Rules framed thereunder or any other instructions issued by the Employer in this regard for the protection of health and for making sanitary arrangements for workers employed directly or indirectly on the works. In case, the Contractor fails to make arrangements as aforesaid, the Engineer-in- Charge shall be entitled to do so and recover the cost thereof from the Contractor.

29.8 The Contractor shall at his own expense arrange for the safety provisions as required by the Engineer-in- Charge, in respect of all labour directly or indirectly employed for performance of the Works and shall provide all facilities in connection therewith. In case the Contractor fails to make arrangements and provide necessary facilities as aforesaid, the Engineer-in-Charge shall be entitled to do so and recover the cost thereof from the Contractor. But this will not absolve the Contractor of his responsibility or otherwise thereof.

29.9 In the event of any injury, disability or death of any workmen in or about the work employed by the Contractor either directly or through his sub-contractor, Contractor shall at all times indemnify and save harmless the Employer against all claims, damages and compensation under the Employee Compensation Act, 1923 as amended from time to time or in other law for the time being in force and rules there under from time to time and also against all costs, charges and expenses of any smooth action by proceedings arising out of such accidents or injury, disability or death of a workmen and against all sum or sums which may with the consent of the Contractor be paid to compromise or compound any claim in this regard. If any award, decree or order is passed against the Contractor for recovery of any compensation under the Employee Compensation Act, 1923, for any injury, disability or death of a workman by any competent court, the said sum or sums shall be deducted by the Engineer-in- charge from any sum then due or that may become due to the Contractor or from his Security Deposit or sale thereof in full or part under the Contract or any other contract with the Employer towards fulfillment of the said decree, award or orders.

29.10 Provided always that the Contractor shall have no right to demand payments/claims whatsoever on account of his compliance with his obligations under this clause and Labour Regulation and the same are deemed to be covered in unit rates of BOQ.

CLAUSE-30: REMOVAL OF CONTRACTOR'S MEN:

The Contractor shall employ on the execution of the Works only such persons as are skilled and experienced in their respective trades and the Engineer-in-Charge shall be at liberty to object to and require the contractor to remove from the works any persons employed by the Contractor on the execution of the works who, in the opinion of the Engineer-in-Charge, misconducts himself or is incompetent or negligent in the proper performance of his duties. The contractor shall forth-with comply with such requisition and such person shall not be again employed upon the works without permission of the Engineer-in- charge. Any person so removed shall be

replaced immediately.

CLAUSE-31: MATERIALS OBTAINED FROM EXCAVATION AND TREASURE, TROVE, FOSSILS ETC:

31.1 Materials of any kind obtained from excavation on the Site shall remain the property of the Employer and shall be disposed off as directed by the Engineer-in-Charge.

31.2 However, if any of the materials thus obtained from excavation on the site is such as can be used in the execution of the Works under the Contract, the Contractor will be allowed to use the same free of cost (except that any amount of royalty, levies are paid by the Contractor) for the aforesaid purposes provided the same is found suitable and is approved by the Engineer-in-Charge.

31.3 Fossils, coins, articles of value, structures and other remains or things of geological or archeological interest discovered on the site shall be the absolute property of the Employer. The Contractor shall take reasonable precautions to prevent his labour or any other person from removing or damaging any such article or thing and shall immediately upon the discovery thereof and before removal acquaint the Engineer-in-Charge with such discovery and carry out the Engineer-in-Charge's directions as to the disposal of the same at the expense of the Employer.

CLAUSE-32: FORCE MAJEURE:

32.1 The term "Force Majeure" shall herein means an exceptional event or circumstance:

a) which is beyond a Party's control.

b) which such Party could not reasonably have provided against before entering into the Contract.

c) which, having arisen, such Party could not reasonably have avoided or overcome, and

d) which is not substantially attributable to the other Party.

Force Majeure may include, but is not limited to, exceptional events or circumstances of the kind listed below, so long as conditions (a) to (d) above are satisfied:

i) war, hostilities (whether war be declared or not), invasion, act of foreign enemies,

ii) rebellion, revolution, insurrection, military or usurped power, or civil war,

iii) riot or commotion or disorder, strike by persons other than the Contractor's personnel and other employees of the Contractor and Subcontractors,

iv) ionising radiation or contamination by radio-activity, and

v) pressure waves caused by air craft or other aerial devices travelling at sonic or supersonic speed.

vi) natural catastrophes such as earthquake, hurricane, typhoon or volcanic activity.

vii) Spread of pandemic in the country where works are being executed.

32.2 If a Party is or will be prevented from performing any of its obligations under the Contract by Force Majeure, then it shall give notice to the other Party of the event or circumstances constituting the Force Majeure and shall specify the obligations, the performance of which is or will be prevented. The notice shall be given within 14 days after the Party became aware, or should have become aware, of the relevant event or Circumstance Constituting Force Majeure.

The Party shall, having given notice, be excused performance of such obligations for so long as such Force Majeure prevents it from performing them.

Notwithstanding any other provision of this Clause. Force Majeure shall not apply to obligations of either Party to make payments to the other Party under the Contract.

32.3 Each Party shall at all times use all reasonable endeavors to minimize any delay in the performance of the Contract as a result of Force Majeure.

A Party shall give notice to the other Party when it ceases to be affected by the Force Majeure.

32.4 On occurrence of Force Majeure, the liability of either Party shall be dealt with, in accordance with the provisions of sub-clause 34.2

32.5 Should there be a request for extension of time arising out of "Force Majeure" the same shall be considered in accordance with clause 39.

CLAUSE 33: LIABILITY FOR DAMAGE, DEFECTS OR IMPERFECTIONS AND RECTIFICATIONS THEREOF:

33.1 If the Contractor or his labour or sub-contractor, injure, destroy or damage roads, fence enclosures, water pipes, cables, buildings, drains, electricity or telephone posts, wires, trees, grass line, cultivated land in the area in which they may be working or in the areas contiguous to the premises on which the work or any part of it is being executed or if any damage is caused during the progress of work, the Contractor shall upon receipt of a notice in writing in that behalf from the Engineer-in-Charge, make the same good at his costs.

33.2 If it appears to the Engineer-in-Charge or his representative at any time during construction or reconstruction or prior to the expiration of the Defects Liability Period that any work has been executed with unsound, imperfect or unskilled workmanship or that any materials or articles provided by the Contractor for execution of the Works are unsound or of a inferior quality, or otherwise not in accordance with the Contract, or that any defect, shrinkage or other faults found in the work arising out of defective or improper materials or workmanship, the Contractor shall, upon receipt of a notice in writing in that behalf from the Engineer-in-Charge, forthwith rectify or remove and reconstruct the work so specified in whole or in part, as the case may be, and/or remove the materials/articles so specified and provide other proper and suitable materials at his own expense.

33.3 If the Contractor fails to rectify, make good or remove and reconstruct the work as notified herein above, the Engineer-in-Charge shall have power to carry out such damages, defects or imperfections by any means or through any other agency or by himself at the risk and cost of the Contractor. In such a case the value of such rectification/replacement, reconstruction through such agencies shall be recovered from the Contractor from any amount due to him. The decision of Engineer-in-Charge in this regard shall be final and binding on the contractor.

CLAUSE-34: CONTRACTOR'S LIABILITY AND INSURANCE:

34.1 From commencement to completion of the Work(s) as a whole, the Contractor shall take full responsibility for the care thereof and for taking precautions to prevent loss or damage. He shall be liable for any damage or loss that may happen to the Works or any part thereof and to the Employer's Plant, Equipment and Material (hired or issued to the Contractor). Any such loss or damage shall be restored in good order and condition and in conformity in every respect with the requirements of the Contract Technical specifications and instructions of the Engineer-in-Charge.

34.2 i) Neither Party to the Contract shall be liable to the other in respect of any loss or damage which may occur or arise out of "Force Majeure" to the Works or any part thereof or to any material or article at site but not incorporated in the Works or to any person or anything or material whatsoever of either Party provided such a loss or damage could not have been foreseen or avoided by a prudent person and the either Party shall bear losses and damages in respect of their respective men and materials. As such liability of either Parties shall include claims/compensation of the third Party also.

ii) Provided, however, in an eventuality as mentioned in sub-clause 34.2 (i) above, the following provisions shall also have effect:

(a) The Contractor shall, as may be directed in writing by the Engineer-in-Charge proceed with the erection and completion of the works under and in accordance with the Contract Specifications; and

(b) The Contractor shall, as may be directed in writing by the Engineer-in-Charge, re-execute the works lost or damaged, remove from the site any debris and so much of the works as shall have been damaged and carry the Employer's Material etc, to the Employer's stores. The cost of such re- execution of the works, removal of damaged works and carrying of Employer's store shall be ascertained in the same manner as for deviations and this shall be paid separately to the Contractor.

Provided always that the Contractor shall, at his own cost, repair and make good so much of the loss or damage as has been by any failure on his part to perform his obligations under the Contract or not taking precautions to prevent loss or damage or minimize the amount of such loss or damage.

34.3 The Contractor shall indemnify and keep indemnified the Employer against all losses and claims for death, injuries or damage to any person or any property whatsoever which may arise out of or in consequence of the construction and maintenance of works during the Time for Completion and also against all claims, demands, proceedings, damages, costs, charges and expenses whatsoever in respect of or in relation thereto, and such liabilities shall include claims/compensations of the third Party.

34.4 Within 30 days of issuance of Letter of Acceptance the Contractor shall, without in any way limiting his obligations and responsibilities under this condition, insure and pay all costs and maintain the insurance premium throughout the period of Contract, with the following coverage:

~~(a) the Works, together with materials and Plant for incorporation therein, to the full replacement cost (the term "cost" in this context shall include profit), (CAR / EAR Policy) an additional_% (as mentioned in Schedule D) of Contract Price shall be added in "cost" to arrive at full replacement cost, to account for the materials which is to be issued to the Contractor free of cost by the Employer.~~

~~(b) an additional sum of 15 per cent of such replacement cost as per (a) above, to cover any additional costs of and incidental to the rectification of loss or damage including professional fees and the cost of demolishing and removing any part of the Works and of removing debris of whatsoever nature (CAR / EAR Policy). The deductibles shall be as mentioned in Schedule D.~~

~~(c) the Contractor's Equipment brought at the Site by the Contractor, and in terms of Clause 13.1.2(iii) of GCC., and~~

(d) the contractor's workmen, property and public liability.

34.5 Scope of Cover:

The insurance in paragraphs (a), (b) and (c) of Sub-Clause 34.4 shall be in the joint names of the Contractor and the Employer and shall cover:

(a) The Employer and the Contractor against all loss or damage from whatsoever cause arising other than as provided in Sub-Clause 34.6 from the Commencement date until the date of issue of the relevant Completion Certificate in respect of the Works, and

(b) the Contractor for his liability:

(i) during the Defects Liability Period for loss or damage arising from a cause occurring prior to the commencement of the Defects Liability Period, and

(ii) for loss or damage occasioned by the Contractor in the course of any operations carried out by him for the purpose of complying with his obligations under Clauses 43.

The Insurance Policy shall have a clause of taking no objection certificate from Engineer in Charge before release of any settled claim by insurance company to the Contractor.

34.6 There shall be no obligation for the insurances in Sub-Clause 34.4 to include loss or damage caused by:

(a) war, hostilities (whether war be declared or not), invasion act of foreign enemies.

(b) rebellion, revolution, insurrection, or military or usurped power, or civil war.

(c) ionizing radiations, or contamination by radio-activity from any nuclear fuel or from any nuclear waste from the combustion of nuclear fuel, radio-active toxic explosive or other hazardous properties of any explosive nuclear assembly or nuclear component thereof or

(d) pressure waves caused by aircraft or other aerial devices traveling at sonic or supersonic speeds.

(e) defects in design in the scope of Engineer.

34.7 If the Contractor receives instructions from the Employer to insure against any of the risks mentioned in sub- clause 34.6, or any other risk, such insurance if available shall be effected, at the cost of the Employer.

34.8 In case of any loss from the reason other than detailed Para 34.6 & 34.7 above, difference of loss and amount realized from Insurance Company including deductibles shall be borne by the Contractor.

34.9 The Contractor shall, without limiting his or the Employer's obligations and responsibilities, insure, in the joint names of the Contractor and the Employer, against liabilities for death of or injury to any person or loss of or damage to any property (other than the Works) arising out of the performance of the Contract for at least the amount stated here under:

(i) Public liability limits for bodily injury not less than Rs.2, 50,000 and/or for death not less than Rs. 5, 00,000 per person for each accident.

(ii) Property liability limits for each accident not less than Rs.10, 00,000 (ten lacs).

Limit of total liability both for Public and Property under sub-clause 34.9 (i) and 34.9(ii) shall be 10 % of Contract Price, In case, the total liability exceeds the limit of 10% of contract price, the minimum liability as mentioned under Para (i) & (ii) shall be applicable."

34.10 The insurance policy shall include a cross liability clause such that the insurance shall apply to the Contractor and to the Employer as separate insured.

34.11 The Employer shall not be liable for in respect of any damages or compensation payable to any workman or other person in the employment of the Contractor or any subcontractor, other than death or injury resulting from any act or default of the Employer, his agents or servants. The Contractor shall indemnify and keep indemnified the Employer against all such damages and compensation, other than those for which the Employer is liable as aforesaid, and against

all claims, proceedings, damages costs, charges and expenses whatsoever in respect thereof or in relation thereto.

34.12 The Contractor shall insure against such liability and shall continue such insurance during the whole of the time and that any persons are employed by him on the Works. Provided that, in respect of any persons employed by any subcontractor, the Contractor's obligations to insure as aforesaid under this liability in respect of such persons in such manner that the Employer is indemnified under the policy, but the Contractor shall require such sub-contractor to produce to the Employer, when required, such policy of insurance and the receipt for the payment of the current premium.

34.13 Within 84 days of the Commencement Date, the Contractor shall provide the insurance policies / evidence of insurance to Engineer-in-charge. Such insurance policies shall be consistent with the general terms agreed prior to the issue of the Letter of Acceptance. The Contractor shall effect all insurances for which he is responsible with insurers and in terms approved by the Employer.

34.14 The Contractor shall notify the insurers of changes in the nature, extent or Programme for the execution of the Works and ensure the adequacy of the insurances at all times in accordance with the terms of the Contract and shall, when required, produce to the Employer the insurance policies in force and the receipts for payment of the current premiums.

34.15 If the Contractor fails to effect and keep in force any of the insurances required under the Contract, or fails to provide the policies to the Engineer-in-charge within the period required by Sub-Clause 34.12 then and in any such case the Engineer-in-charge may effect the recovery of such premium on pro-rata basis from the Running Account bills of the Contractor. Additionally, the payment of Running Account bills may also be suspended until the Contractor complies with the requirements of sub clause 34.12 of these conditions. If non-insurance prolongs for a period of continuous 2 months, the Employer may treat it as Default of Contractor as per the provisions of clause 38 of GCC.

34.16 In the event that the Contractor or the Employer fails to comply with conditions imposed by the insurance policies effected pursuant to the Contract, each shall indemnify the other against all losses and claims arising from such failure.

34.17 The Contractor shall at his own expense arrange for the safety provisions as laid down in applicable Law & Regulations and in Safety Manual of the Employer in respect of the works covered under this Contract. In case, the Contractor fails to comply with the provisions of the safety manual, the Engineer-in-Charge shall be entitled to and make the necessary arrangement at the risk and cost of the Contractor. This will, however, not absolve the Contractor of his overall responsibility to execute the works under the Contract.

CLAUSE 35: SUSPENSION OF WORKS:

35.1 The contractor shall on the order of the Engineer-in- charge suspend the progress of the Works or any part thereof for such time or times and in such manner as the Engineer-in-Charge may

consider necessary and shall during such suspension properly protect and secure the work so far as is necessary in the opinion of the Engineer-in- charge. If such suspension is:

(a) provided for in the Contract, or

(b) necessary for the proper execution of the Works or by reason of weather conditions or by some default on the part of the Contractor, or

(c) necessary for the safety of the Works or any part thereof.

The Contractor shall not be entitled to extra costs (if any) incurred by him during the period of suspension of the works; but in the event of any suspension ordered by the Engineer-in-Charge for reasons other than aforementioned and when each such period of suspension exceeds 14 days, the Contractor shall be entitled to such extension of Time for Completion of the Works as the Engineer-in-Charge may consider proper having regard to the period or periods of such suspensions under clause 39 and shall notify the Contractor accordingly, with approval of the Employer .

35.2 If the progress of Works or any part thereof is suspended on the order of the Engineer-in-Charge for more than three months at a time the Contractor may serve a written notice on the Engineer-in-Charge requiring permission within 15 days from the receipt thereof to proceed with the Works or that part thereof in regard to which progress is suspended and if such permission is not granted within that time the Contractor by a further written notice so served may (but is not bound to) elect to treat the suspension where it affects part only of the Works as an omission of such part or where it affects the whole of the Works as an abandonment of the Contract by the Employer.

CLAUSE 36: FORECLOSURE OF CONTRACT IN FULL OR IN PART DUE TO ABANDONMENT OR REDUCTION IN SCOPE OF WORK:

36.1 If at any time after acceptance of the tender the Employer decides to abandon or reduce the scope of the Works for reason whatsoever and hence does not require the whole or any part of the Works to be carried out, the Engineer-in-Charge shall give notice in writing to that effect to the Contractor, and the contractor shall have no claim to any payment of compensation or otherwise whatsoever, on account of any profit or advantage which he might have derived from the execution of the works in full but which he could not derive in consequence of the fore-closure of the whole or part of the Works.

The Contractor shall be paid at Contract rates for full amount of the works executed at Site and, in addition, a reasonable amount as certified by the Engineer-in-Charge for the items hereunder mentioned which could not be utilized on the works to the full extent because of the foreclosure:

(a) Any expenditure incurred on preliminary works, e.g. temporary access roads, temporary labour huts, staff quarters and Site office; storage accommodation workshop, installation and dismantling of Construction Equipment (batching plant, crushing plant) and water

storage tanks.

(b) i) The Employer shall have the option to take over Contractor's materials or any part thereof, either brought to site or of which the Contractor is legally bound to accept delivery from suppliers (for incorporation in or incidental to the Work), provided, however, the Employer shall be bound to take over the material or such portions thereof as the Contractor does not desire to retain. The cost shall, however, take into account purchase price, cost of transportation and deterioration or damage which may have been caused to materials whilst in the custody of the Contractor.

ii) For Contractor's materials not retained by the Employer, reasonable cost of transporting such materials from Site to Contractor's permanent stores or to his other Works, whichever is less. If materials are not transported to either of the said places, no cost of transportation shall be payable.

(c) If any materials issued by the Employer are rendered surplus, the same except normal wastage for the materials used in the works shall be returned by the Contractor to the Employer.

(d) Reasonable compensation for transfer of T&P from Site to Contractor's permanent stores or to his other works whichever is less. If T&P are not transported to either of the said places, no cost of outward transportation shall be payable.

36.2 The Contractor shall, if required by the Engineer-in- charge, furnish to him books of account, wage books, time sheets and other relevant documents as may be necessary to enable him to certify the reasonable amount payable under this condition.

CLAUSE-37: TERMINATION OF CONTRACT ON DEATH:

If the Contractor is an individual or a proprietary concern and the individual or the proprietor dies, or if the Contractor is a partnership concern and one of the partners dies, then, unless the Engineer-in-Charge is satisfied that the legal representatives of the individual Contractor or of the proprietor of the proprietary concern and in the case of partnership, the surviving partners are capable of carrying out and completing the contract, the Engineer-in-Charge shall be entitled to terminate the Contract as to its uncompleted part without the Employer being in any way liable to payment of any compensation whatsoever on any account to the estate of the deceased Contractor and/or to the surviving partners of the Contractor's firm on account of termination of the Contract. The decision of the Engineer-in-Charge that the legal representatives of the deceased Contractor or the surviving partners of the Contractor's firm cannot carry out and complete the Works under the Contract shall be final and binding on the parties. In the event of such termination, the Corporation shall not hold the estate of the deceased Contractor and/or the surviving partners of the Contractors firm liable for damages for not completing the Contract. Provided that the power of the Engineer-in- charge of such termination of Contract shall be without prejudice to any other right or remedy, which shall have accrued or shall accrue to him under the Contract.

CLAUSE-38: DEFAULT BY THE CONTRACTOR AND TERMINATION OF CONTRACT IN FULL OR IN PART:

38.1 If the Contractor:

i) commits default in complying with or commits breach of any of the conditions of the Contract and does not remedy it or take effective steps to remedy it immediately after a notice in writing is given to him by the Engineer-in-Charge; or

ii) fails to complete the Works or any item of Works within the time specified in Schedule 'C' or any extended time under the Contract and does not complete the Work(s) or any item of Work(s) within the period specified in a notice given in writing by the Engineer-in-Charge; or

iii) is engaged in corrupt or fraudulent or Collusive or Coercive practices in competing for or in the execution of the Contract, then the Employer may, after giving 14 days' notice to the Contractor, terminate the contract and expel him from the Site. The Contractor shall not be entitled for any compensation whatsoever under this clause. For the purpose of this clause

a) **'Corrupt Practice'** means offering, giving, receiving or soliciting of any-thing of value to influence the action of a public official in the procurement or execution of Contract.

b) **'Fraudulent Practice'** means mis-representation of fact in order to influence the tendering process or the execution of a Contract and includes collusive practice among bidders (prior to or after bid submission) designed to establish bid prices at artificial non-competitive levels and to deprive the employer of the benefits of free and open competition.

c) **'Collusive Practice'** means a scheme or arrangement between two or more bidders, with or without the knowledge of Borrower/Employer, designed to establish Bid prices at artificial, non-competitive levels.

d) **'Coercive Practice'** means harming or threatening to harm, directly or indirectly, person or their property to influence or affect the execution of Contract,

iv) being an individual, or if a firm, any partner thereof, shall at any time be adjudged insolvent or have a receiving order or order for administration of his estate made against him or shall take any proceedings for liquidation for the purpose of amalgamation or reconstruction under any insolvency Act for the time being in force or make any conveyance or assignment of his effective or composition or arrangement for the benefit of his creditors or purport as to do, or if any application be made under any insolvency Act for the time being in force for the sequestration of his estate or if a trust deed be executed by him for benefit of his creditors; or

v) being a company shall pass a resolution or the Court shall make an order for the liquidation of its affairs or a receiver or manager on behalf of the debenture holders shall be appointed or circumstances shall arise which entitle the Court or debenture holders to appoint a receiver or manager; or

vi) shall suffer an execution in an execution being levied on his goods; or

vii) assigns, transfers, sublets (engagement of labour on a piece-work basis or of labour with

materials not being incorporated in the work shall not be deemed to be subletting) or attempts to assign, transfer or sublet the entire works or any portion thereof without the prior written approval of the Engineer-in-Charge,

Then the Employer shall have powers to terminate the Contract in full or in part as aforesaid without prejudice to any other right or remedy which shall have accrued or shall accrue of which cancellation notice in writing to the Contractor under the hand of the Engineer- in-charge shall be conclusive evidence.

viii) the Employer has in place a Policy for suspension and Banning of Business Dealings as provided on NHPC Website www.nhpcindia.com , the business dealings may be suspended or banned with the Contractor on account of any default by the Contractor under GCC Clause 38.1

38.2 The Employer shall, on such termination of the Contract, have powers to take possession of the site of work under the contract as well as the land/premises allotted to the contractor for his preliminary, enabling and ancillary works and any materials, constructional equipment, implements, stores, structures etc. thereon. The Employer shall also have powers to carry out the incomplete work by any means or through any other agency or by himself at the risk and cost of the Contractor.

38.3 If the expenses incurred or to be incurred by the Employer for carrying out and completing the incomplete work or part of the same, are in excess of the value of the work credited/to be credited to the Contractor, the difference shall be paid by the Contractor to the Employer. If the Contractor fails to pay such an amount, as aforesaid, within thirty days of receipt of notice in writing from the Engineer-in-Charge, the Engineer-in-Charge shall recover such amount from any sums due to the Contractor on any account under this or any other contract or from his Security Deposit or otherwise.

38.4 The Engineer-in-Charge shall have the right to sell any or all the Contractor's unused materials, Constructional Equipment, implements, temporary buildings/structures etc. and apply the proceeds of sale thereof towards the satisfaction of any sums due from the Contractor under the Contract and if thereafter there may be any balance outstanding from the Contractor, the Employer shall have powers to recover the same as debt.

38.5 All decisions/actions of the Engineer-in-Charge under this clause, as aforesaid, shall be conclusive and binding on the contractor.

CLAUSE-39 : TIME FOR COMPLETION AND EXTENSIONS:

39.1 Time for Completion allowed for execution of the Works is as specified in Schedule `C' of these conditions.

39.2 However, if the work is delayed on account of:

i) Delay in handing over of site to the Contractor as per clause 12; or

ii) Delay in supply of construction drawings as per clause 15.4; or

iii) Increase in the quantity of work to be done under the contract as per clause 18; or

iv) Suspension of work as per clause 35; or

v) Rebuilding of work as per clause 34; or

vi) "Force Majeure" conditions as per clause 32 or

vii) physical conditions not foreseeable by an experienced contractor as defined in clause 5.2 of GCC, or

viii) Any other cause which, in the opinion of the Engineer-in-Charge is beyond the Contractor's control;

then, immediately upon the happening of any such event as aforesaid, the Contractor shall inform the Engineer- in-charge accordingly, but the Contractor shall nevertheless use constantly his best endeavors to prevent and/or make good the delay and shall do all that may be required in this regard. The Contractor/Engineer-in-Charge is required to jointly maintain Hindrance Registers **(Annexure-I)** for recording hindrances if any, while executing the Works. The Contractor shall request, in writing, for extension of time, to which he may consider himself eligible under the Contract, within 14 (fourteen) days of the date of happening of any such events as indicated above failing which the same shall not be considered or taken into account for any purpose whatsoever.

Provided further that no monetary claims shall be admissible to the Contractor for such extension of Time for Completion except for reimbursement of cost of extension of bank guarantee for security deposit and insurance policy(ies).

39.3 In any such case as may have arisen due to any of the events, as aforesaid, and which shall be brought out by the Contractor in writing, the Engineer-in-Charge may give a fair and reasonable extension of Time for Completion, after taking into consideration the nature of the work delayed and practicability of its execution during the period of extension.

Such extensions, if admissible, shall be communicated to the Contractor by the Engineer-in-Charge in writing. Provided that Engineer- in – charge is not bound to make any determination unless the Contractor has;

a) within 14 days after such event has first arisen notified the Engineer and

b) within 28 days or such other reasonable time as may be agreed by the Engineer – in – charge detailed particulars of any extension of Time for Completion to which the Contractor may consider himself entitled.

CLAUSE-40: COMPENSATION FOR DELAY:

40.1 If the Contractor fails to complete the work as a whole as specified in Schedule `C' before the expiry of the period(s) of completion as stipulated in the aforesaid Schedule, or any extended period under Clause 39 as may be allowed, he shall without prejudice to any other right or remedy

of the Employer on account of such default, pay as an ascertained/agreed compensation as stipulated in the aforesaid Schedule ‘C' not by way of penalty. However, maximum amount of compensation for delay on account of work as a whole shall not exceed 10% of the Contract Price.

40.2 The amount of compensation may be adjusted/withheld/ deducted or set-off against any sum due or payable to the Contractor under this or any other contract with the Employer. The payment or deduction of such damages shall not relieve the Contractor from his obligation to complete the Works or from any other obligations and liabilities under the Contract.

CLAUSE-41: INSPECTION AND APPROVAL:

41.1 All works embracing more than one process shall be subject to examination and approval at each stage thereof and the Contractor shall give due notice to the Engineer-in-Charge or his authorized representative, when each stage is ready. In default of such notice, the Engineer-in-Charge shall be entitled to appraise the quality and extent thereof and the decision of the Engineer-in-Charge in this regard shall be final and binding.

41.2 No work shall be covered or put out of view without the approval of the Engineer-in-Charge or his authorized representative and the Contractor shall afford full opportunity for examination of foundations before permanent work is placed thereon. The Contractor shall give due notice to the Engineer-in-Charge or his authorized representative whenever any such work or foundation is ready for examination and the Engineer-in- charge or his representative shall, without unreasonable delay, unless he considers it unnecessary and advises the Contractor accordingly, examine and measure such work or such foundations. In the event of the failure of the contractor to give such notice, he shall, if required by the Engineer-in-Charge, uncover such work at the Contractor's expense.

41.3 The Engineer-in-Charge or his representative shall have powers at any time to inspect and examine any part of the works and Contractor shall give such facilities as may be required for such inspection and examination.

41.4 The Contractor shall uncover any part of the Works and/or make opening in or through the same as the Engineer-in- charge may from time to time direct for his verification and shall reinstate and make good such part to the satisfaction of the Engineer-in-Charge. If any such part has been covered up or put out of view after being approved by the Engineer-in-Charge and is subsequently found, on uncovering, to be executed in accordance with the contract, the expenses of uncovering and/or making openings in or through, reinstating and making good the same, shall be borne by the Employer. In any other causes all such expenses shall be borne by the Contractor.

CLAUSE-42: COMPLETION CERTIFICATE:

42.1 The Works shall be completed to the entire satisfaction of the Engineer-in-Charge and in accordance with the time mentioned in Schedule `D' and terms and conditions mentioned in clause-39. As soon as the Works under the Contract is completed as a whole, the Contractor shall give notice of such completion to the Engineer-in-Charge. The Engineer-in-Charge, within two week of receipt of such notice, shall inspect the Works and shall satisfy himself that the Work(s) has been completed in accordance with the provisions of the Contract and then issue to the Contractor a certificate of completion indicating the date of completion except for any minor outstanding works and minor defects which will not substantially affect the use of Works for their intended. Should the Engineer-in-Charge notice that there are major defects in the Works or the Works are not considered to be substantially complete, he shall issue a notice in writing to the Contractor to rectify/replace the defective Works or any part thereof or complete the Works, as the case may be, within such time as may be notified and after the Contractor has complied with as aforesaid and gives notice of completion, the Engineer-in-Charge shall inspect the work and issue the completion certificate in the same manner as aforesaid.

42.2 No certificate of completion shall be issued as stipulated under 42.1 above nor Work be considered to be completed unless the Contractor shall have removed from the work site and/or premises all his belongings/temporary arrangements brought/made by him for the purpose of execution of the work and clean the site and/or premises in all respects and made the whole of the site and or premises fit for immediate occupation/use to the satisfaction of the Engineer-in-Charge. If the Contractor fails to comply with the above mentioned requirements on or before the date of completion of the Work, the Engineer-in-Charge, may, as he thinks fit and at the risk and cost of the Contractor, fulfill such requirements and remove/dispose off the Contractor's belongings/temporary arrangements, as aforesaid, and the Contractor shall have no claim in this respect except for any sum realized by the sale of Contractor's belongings/temporary arrangements less the cost of fulfilling the said requirements and any other amount that may be due from the Contractor. Should the expenditure on the aforesaid account exceed the amount realized by sale of such Contractor's belongings/temporary arrangements than the Contractor shall on demand, pay the amount of such excess expenditure.

CLAUSE-43: DEFECTS LIABILITY PERIOD:

43.1 The "Defect Liability Period" for the entire work under the Contract is 12 months from the certified date of completion as per clause 42.

43.2 If during the Defects Liability Period any portion of the Works is found defective or deficient in any manner and is repaired/rectified/replaced pursuant to the defects liability provisions of the Contract, the Defects Liability Period for such portion of the Works, shall, notwithstanding anything to contrary contained herein, be operative for a further period of 6 months from the date of such repair/rectification/ replacement but shall not in any case be operative for more than 18 months from the date of completion stated in the Completion Certificate.

CLAUSE-44: MEASUREMENTS:

44.1 The Engineer-in-Charge shall except as otherwise stated ascertain and determine by measurement, the value of work done in accordance with the Contract.

44.2 Notwithstanding any provision in the relevant standard method of measurement or any general or local custom, measurement of work done under the Contract shall be taken in accordance with the procedure set forth in the Technical Specifications or Bill of Quantities under the Contract. In the case of items of work, which are not covered by the Technical Specifications or Bill of Quantities, measurement shall be taken in accordance with the relevant standard methods of measurements laid down by the Bureau of Indian Standards (BIS).

44.3 All items having a financial value shall be entered in measurement book, level book, etc., prescribed by the Employer so that a complete record is maintained of all work performed under the Contract.

44.4 Measurement shall be taken jointly by the Engineer-in- charge or his representative and by the Contractor or his authorised representative.

44.5 Before taking measurement of any works, the Engineer-in- charge or his representative, shall give a reasonable notice to the Contractor. If the Contractor fails to attend or send an authorised representative for measurement after such a notice or fails to countersign or to record the objection within a week from the date of taking the measurements, then in that event the measurements taken by the Engineer-in- charge shall be taken to be correct and final measurements of such work.

44.6 The Contractor shall, without extra charge, provide assistance with every appliance, labour and other appliances (theodolite, level etc.) and things necessary for measurement.

44.7 Measurement shall be signed and dated by both parties on the Site on completion of measurement. If the Contractor objects to any of the measurements recorded by the representative of the Engineer-in-Charge a note to that effect shall be made in the measurement book against the item objected to and such note shall be signed and dated by both parties engaged in taking the measurement. The decision of the Engineer-in-Charge on any such dispute or difference or interpretation shall be final and binding on the contractor in respect of all contract items, substituted items, extra items and deviations. Provided that items of work which are not susceptible to measurement at the later date must be measured jointly and signed accordingly by both the parties at the time of execution of such items.

CLAUSE-45: PAYMENT ON ACCOUNT:

45.1 Running Account bills shall be submitted by the Contractor monthly on or before the date fixed by the Engineer-in-Charge for the work executed. The Engineer-in-Charge shall then verify the bills with reference to the measurements recorded in the measurement book(s).

45.2 Payment on account for amount admissible shall be made on the Engineer-in-Charge certifying the sum to which the contractor is considered entitled by way of interim payment for the work executed, after deducting therefrom the amounts already paid, the security deposit and such

other amounts as may be withheld/deductable or recoverable in terms of the Contract.

45.3 Payment of the Contractor's bills shall be made by the Employer within 28 days from the date of submission of the bill subject to the acceptance of the Engineer-in- charge.

In case of any disagreement between EIC and Contractor on any part of the bill, such part shall be severed from the rest and payment of such part shall be withheld by the EIC and payment of balance admissible part of Contractor's bill shall be processed and released within specified 28 days. The clarification on disagreed part, if any, required on any item of Contractor's bill shall be sought by the EIC within 21 days of bill submission and except in exceptional circumstances, these clarifications shall be sought in one go. Similarly, the Contractor shall also be required to submit the clarification sought within next 21 days.

45.4 Payments due to the Contractor shall be made by crossed Cheque/RTGS/NEFT by the Engineer-in-Charge or his representative. Such cheques shall be issued direct to the Contractor on furnishing a stamped receipt for the amount of the cheque or to his constituted attorney duly authorized to receive such payments from the Engineer-in- charge.

45.5 Any Running Account bills given relating to work done or materials delivered, may be modified or corrected by any subsequent Running Account bills or by the final bill. No certificate(s) of the Engineer-in-Charge supporting an Running Account bill shall itself be conclusive evidence that any work or materials to which it relates is/are in accordance with the Contract.

45.6 Should there be a request for extension of Time for Completion, pending its consideration, interim payments shall continue to be made as provided herein.

45.7 After receipt of clarifications as per Clause 45.3 / modifications furnished by contractor as per Clause 45.3 and acceptance thereof by the Employer, payment in respect of such withheld items shall be released to the contractor through next Running Account bill.

~~45.8 With respect to non-perishable materials which are not combustible, fragile or perishable in nature (listed in the Schedule-D) and brought by the Contractor to the Site for incorporation in the Permanent Works, the Contractor shall receive a credit in the month in which these materials are brought to the Site and be charged a debit in the month in which they are incorporated in the Permanent Works which shall not be more than 90 days from release of advance payment, both such credit and debit to be determined by the Engineer-in-Charge in accordance with the following provisions:~~

~~(a) no credit shall be given unless the following conditions shall have been met to the Engineer-in-Charge's satisfaction:~~

~~(i) the materials are in accordance with the Specifications for the Works;~~

~~(ii) the materials have been delivered to the Site and are properly stored and protected against loss, damage, or deterioration;~~

~~(iii) the Contractor's record of the requirements, order, receipts and use of materials are~~

~~kept in a form approved by the Engineer, and such records are available for inspection by the Engineer;~~

~~(iv) the Contractor has submitted a statement of his cost of acquiring and delivering the materials to the Site, together with such documents as may be required for the purpose of evidencing such cost ;~~

~~(v) the materials are to be used within a reasonable time;~~

~~(b) the amount to be credited to the Contractor shall be the equivalent of 75%(seventy five percent) of the Contractor's reasonable cost of materials delivered to the Site, as determined by the Engineer-in-Charge after review of the documents listed in sub-para (a)(iv) above and submission of indenture bond as prescribed in the Contract hypothecating the materials to the Employer;~~

~~(c) the amount to be debited to the Contractor for any materials incorporated into the Permanent Works shall be equivalent to the credit previously granted to the Contractor for such materials pursuant to Sub- Clause (b) above, as determined by the Engineer-in-Charge.~~

45.9 The Contractor shall be paid 75% (seventy-five percent) of the admissible Running Account bill amount, after due recoveries within 10 days of submission of Running Account bill. The balance due amount under the Running Account bill shall be paid to the Contractor within 28 days of submission of bills after due certification by the Engineer-in-charge.

45.10 Omissions on the part of the Engineer to pay the amount due upon measurement or otherwise shall neither vitiate nor make the contract void. Further, no claim for interest or damages will be entertained or payable by the Employer upon

i). any Bank Guarantee or
ii). payments in arrears or
iii). any balance which may become due on final settlement/re-conciliation of the account or
iv). withheld by the Employer owing to any dispute or difference between the parties.

45.11 DELAYED PAYMENT:

All the undisputed payments for the works performed by Contractor under the Contract shall be released within twenty-eight days from the receipt of invoice/bills from the Contractor complete in all respect.

In case, payment is not released as mentioned above, the Employer shall pay the principal amount plus simple interest from the date immediately following the date agreed upon @ 6%p.a.

~~**45.12 Compliance of BRSR Policy:**~~

~~In order to comply with Policy on Business Responsibility and Sustainability Report (BRSR) of Employer (available at Employer's website 'www.nhpcindia.com'), the contractor as a Value Chain Partner shall submit disclosures with every RA Bill and Final Bill during execution of contract in the format prescribed at Schedule- D certifying their compliances towards Sustainability Standards based on Environment, Social and Governance (ESG) Parameters. The contractor shall provide free and smooth access to the authorized person(s) of Employer in its premises (office/assets/locations/units etc.) to confirm /evaluate / rectify the same, as and when required.~~

CLAUSE-46: PRICE ADJUSTMENT/VARIATIONS:

~~46.1 Payment to Contractor for work done shall be adjusted for increase or decrease in the cost of Labour, Materials (except for those materials supplied by the Employer) and Petrol, Diesel, Oil and Lubricants (POL) according to the procedure mentioned hereunder:-~~

~~**A) LABOUR:**~~

~~If after, Base Date and during the currency of the Contract, there is any increase or decrease in the cost of labour as reflected in the " All India Consumer Price Index" and minimum wages for unskilled labour notified by State Government (Where work is being executed)", the corresponding increase or decrease in the payments to the Contractor on this account shall be calculated by the formula:-~~

$$V_1 = \frac{R}{100} \times \left[L \times \left(\frac{(1 - l_0)}{l_0} \right) + U \times \left(\frac{(u - u_0}{u_0} \right) \right]$$

$$V_1 = \frac{R}{100} \times \left[L \times \left(\frac{(1 - l_0)}{l_0} \right) + U \times \left(\frac{(u - u_0}{u_0} \right) \right]$$

~~Where: -~~

~~V1 = Amount to be adjusted in Contractor's payment for the work done during the month under consideration.~~

~~L = Percentage of Labour component (other than unskilled) in the value of work as mentioned in Schedule `D'.~~

~~U = Percentage of Labour component (unskilled) in the value of work as mentioned in Schedule `D'.~~

~~R= Value of work done and payable during the month under review (excluding those extra, additional, substituted and altered items of work, whose rates have been worked out and paid on the basis of actual analysis of costs or based on the current market rates).~~

~~Io = All India Consumer Price Index for Industrial Workers, General Index (Base 2016= 100) for the previous month in which price bids were submitted as published in the Indian Labour Journal of 'Labour Bureau', Ministry of Labour, Government of India.~~

~~I = All India Average Consumer Price Index for Industrial Workers (General Index) with respect to the same base, as above, for the month under consideration.~~

~~u_0 = Rate of Minimum wage applicable for unskilled labour notified by the State Government for the previous month in which price bids were submitted.~~

~~u = Rate of Minimum wage applicable for unskilled labour notified by the State Government for the month under consideration.~~

~~B) MATERIALS AND MACHENRY:~~

~~If after, Base Date and during the currency of the Contract, there is any increase or decrease in the prices of materials (to be arranged by the Contractor) as reflected in the Index Numbers of Wholesale prices in India (Base 2011-12 =100) under sub-group/group (as mentioned in schedule D), the corresponding increase or decrease in the payments to the contractor shall be made according to the following formula: -~~

$$V_2 = R \left[C\left(\frac{c - c_0}{c_0}\right) + S\left(\frac{s - s_0}{s_0}\right) + E\left(\frac{e - e_0}{e_0}\right) + M\left(\frac{m - m_0}{m_0}\right) \right] \frac{10}{0}$$

$$V_2 = \frac{R}{100} \times \left[\frac{C(c-c_0)}{c_0} + \frac{S(s-s_0)}{s_0} + \frac{E(e-e_0)}{e_0} + \frac{M(m-m_0)}{m_0} \right]$$

$$V_2 = \frac{R}{100} \times \left[\frac{C(c-c_0)}{c_0} + \frac{S(s-s_0)}{s_0} + \frac{E(e-e_0)}{e_0} + \frac{M(m-m_0)}{m_0} \right]$$

~~Where:-~~

~~V2 = Amount of variation payable to or recoverable from the Contractor during the month under review, based on monthly average and adjusted along with the bill.~~

~~R = Value of work done and payable during the month under review (excluding those extra, additional, substituted and altered items of work, whose rates have been worked out and paid, on the basis of actual analysis of costs or are based on the current market rates).~~

~~C,S,E & M = Percentage of Material component : C for "Cement"; S for "Reinforcement Steel"; E for "Other Material component" & M for " Construction Machinery" in the value of work as mentioned in Schedule `D'.~~

~~c_0 = Index Number of the Wholesale prices in India for sub head (e) Manufacture of Cement, Lime and Plaster (Base 2011-12 =100) under head (M) 'Manufacture of Other-Non Metallic Mineral Products', for the previous month in which price bids were submitted as published in the monthly Bulletin issued by the Office of Economic Adviser, Ministry of Industry, Government of India, New Delhi.~~

~~c = The monthly Index Number of the Wholesale prices in India for sub head (e) Manufacture of Cement, Lime and Plaster (Base 2011-12 =100) under head (M) 'Manufacture of Other-Non Metallic Mineral Products', prevailing one month prior to last day of the period under consideration as published in the monthly Bulletin issued by the Office of Economic Adviser, Ministry of Industry, Government of India, New Delhi.~~

~~s_0 = Index Number of the Wholesale prices in India for sub head (d) "Mild Steel-Long Product" (Base 2011-12 =100) under head (N) 'Manufacture of Basic Metals', for the previous month in which price bids~~

~~were submitted as published in the monthly Bulletin issued by the Office of Economic Adviser, Ministry of Industry, Government of India, New Delhi.~~

~~s= The monthly Index Number of the Wholesale prices in India for sub head (d) "Mild Steel-Long Product" (Base 2011-12 =100) under head (N) 'Manufacture of Basic Metals', prevailing one month prior to last day of the period under consideration as published in the monthly Bulletin issued by the Office of Economic Adviser, Ministry of Industry,~~

~~Government of India, New Delhi.~~

~~e_0 = Index Number of the Wholesale prices in India for "All Commodities" (Base 2011-12 =100) for the previous month in which price bids were submitted as published in the monthly Bulletin issued by the Office of Economic Adviser, Ministry of Industry, Government of India, New Delhi.~~

~~e = The monthly Index Number of the Wholesale prices in India for "All Commodities" (Base 2011-12 =100) , prevailing one month prior to last day of the period under consideration as published in the monthly Bulletin issued by the Office of Economic Adviser, Ministry of Industry, Government of India, New Delhi.~~

~~m_0= Index Number of the Wholesale prices for sub head (k) "Manufacture of Machinery for Mining, Quarrying and Construction" (Base 2011-12 = 100) under head (R) 'Manufacture of Machinery and Equipment' for the previous month in which price bids were submitted as published in the monthly Bulletin issued by the Office of Economic Adviser, Ministry of Industry, Government of India, New Delhi.~~

~~m = The monthly Index Number of the Wholesale prices in India for sub head (k) "Manufacture of Machinery for Mining, Quarrying and Construction"(Base 2011-12 =100) under head (R) 'Manufacture of Machinery and Equipment', prevailing one month prior to last day of the period under consideration as published in the monthly Bulletin issued by the Office of Economic Adviser, Ministry of Industry, Government of India, New Delhi.~~

~~c) PETROL, DIESEL, OIL AND LUBRICANTS:~~

~~If after, Base Date and during the currency of the contract, there is any price variation (increase or decrease) in the cost of petrol, diesel, oil and lubricants, the same shall be paid to or recovered from the Contractor in accordance with the following formula:~~

$$V_3 = \frac{R}{100} \times \frac{P \times (x - x_0)}{x_0}$$

$$V_3 = \frac{R}{100} \times \frac{P \times (x - x_0)}{x_0}$$

~~Where:~~

~~V3 = the increase or decrease in the total payment to be made to the Contractor during the month under review, based on monthly average and adjusted along with the bills.~~

~~R = Value of work done and payable during the month under review (excluding those extra, additional, substituted and altered items of work, whose rates are based on actual analysis or the current market rates).~~

~~P = component of POL as percentage in the value of work as indicated in Schedule `D'.~~

~~xo = All inclusive official price of Diesel as notified by Indian Oil Corporation for bulk supply applicable on 28th day before the last date of submission of price bids for the State where work is undertaken.~~

~~x = Average all inclusive official bulk price of Diesel on last day of previous month. As notified by Indian Oil Corporation for bulk supply in the State where work is undertaken from time to time during the month.~~

~~46.2 Provided further that adjustments on account of above as provided in sub-clause 46.1 shall be subject to the following:~~

~~(a) In the case of material brought to site for which any secured advance is includes in the Running Account bills according to Clause 45.9, the amount of such secured advance considered as a credit shall be added to the value of work done (R) for operation of this clause. Similarly, when such material are incorporated in the work and the secured advance is debited, the amount of secured advance originally considered for operation of this clause should be deducted from the value of work done (R).~~

~~b) Price adjustment shall be applicable only for the work that is carried out within the Time for Completion as in Schedule `D' or extended time if any under clause 39 of GCC for which no damages are leviable on the Contractor.~~

~~c) Variations arising on account of payment related to rates for extra, altered and substituted items whose cost has been worked out on actual analysed cost or on market price basis as envisaged in Clause 18.2 shall be regulated with reference to such variations in cost as are subsequent to the date of settlement of the rates, instead of the date of submission of price bids.~~

~~d) No separate escalation whatsoever shall be payable for reimbursement of any statutory or otherwise, increase in customs duty, excise duty, sales tax, octroi, Dharat etc. on materials and on labour under Clause 47.2 required for the execution of the work over and above the provisions made in this clause.~~

~~e) No claims whatsoever for the Price Adjustments/ Variations other than those stipulated above shall be entertained.~~

~~46.3 To the extent that full compensation for any rise or fall in costs to the Contractor is not covered~~

~~by the provisions of this or other Clauses in the Contract, the unit rates and prices included in the Contract shall be deemed to include amounts to cover the contingency of such other rise or fall of costs.~~

~~46.4 Subject to provisions of sub-para 46.1 and 46.2 above, provisional monthly payments on account of Price Variation on contract rates will be made to the Contractor alongwith the running account bills for works on the basis of latest available provisional price indices and the same shall be adjusted as and when the final indices of that period are available.~~

~~46.5 If the Contractor fails to complete whole of the Works within the Time for Completion, adjustment of prices thereafter until the date of completion of the Works shall be made using either the indices or prices relating to the Time for Completion, or the current indices or prices, whichever is more favourable to the Employer, provided that if an extension of time is granted pursuant to Clause 39 the above provision shall apply only to adjustments made after the expiry of such extension of time.~~

~~46.6 In case the Government of India stops publishing any of the Price indices at any time during the course of execution of the contract and announces a new series with a linking factor for conversion of index of new series to the old series, regulation of price variation will be done using the indices of new series along with linking factor, as published by the relevant Authority, from the date, the indices of old series become unavailable~~

~~The price variation calculation will be done using the indices of old series, till the date the indices of the old series are available.~~

~~In case the Government of India stops publishing any of the Price indices at any time during the course of execution of the contract and announces a new series without a linking factor for conversion of index of new series to the old series or allows use of any method for linking the two series (Old and New), regulation of price variation will be done using the indices of new series along with linking factor to be derived using arithmetic conversion method based on monthly indices of the last 36 months of the old series and the same period for new series:~~

~~Linking Factor for a commodity = (Arithmetic mean of the monthly indices of the old series of the concerned commodity for the last 36 months of the old series)/ (Arithmetic mean of the monthly indices of the new series of the same commodity for the same period i.e. the last 36 months of the old series)~~

~~The price variation calculation shall be done using the indices of new series along with this linking factor, in the Price Variation Formula from the date, the old series is discontinued.~~

~~The index value at four-digit level of aggregation shall be used in case of non-availability the two digit level of aggregation shall be used.~~

~~In case a particular commodity is removed from the basket for the old WPI series, then appropriate commodity in the new series corresponding to the commodity in the old series is selected based on the similarity of the basket/ trend of the indices of the concerned~~

~~commodities in the common/ overlapping period. The most similar commodity item in the new series shall then be used in the Price Adjustment Formulae. In such case the contractor shall submit the proposal for adoption of new commodity for approval of Engineer, the new commodity shall be adopted in the price adjustment formulae after approval of Engineer.~~

CLAUSE-47: TAXES, DUTIES AND LEVIES ETC:

47.1 All existing customs duty, Goods and Service Tax (GST), business taxes, Income tax or any other applicable indirect / direct tax or duty or levy such as royalty, terminal tax, cess that may be levied in accordance with laws and regulation in force as on 28 days before the last date of submission of price bid that the Contractor has to pay on the Contractor's Equipment, Plant, materials and supplies (permanent, temporary and consumables) acquired for the purpose of the Contract and for the services performed under the Contract shall be payable by the Contractor, and the Employer shall not entertain any claim in this regard. The Contract unit rates shall be deemed to be inclusive of all such taxes, duties, levies etc. including those assessed on the Employer. The Contract unit rates shall also be inclusive of GST liability of the Employer on works (service recipient), if any, which shall be recovered from the Contractor. The Contract unit rates shall also be after taking into account the Input Tax Credit (ITC) and other benefits. Any statutory variation in the rate of aforesaid taxes if any, during the currency of the Contract including extension thereof shall be to the account of Employer provided the amount thus claimed is not paid under price variation clause 46.

Changes in the advance tax rates of Income Tax and any other direct tax payable to appropriate authorities shall not be construed as a change in the rate(s) of taxes and will not be subject to adjustment.

47. 2 However, if a new tax or duty or levy, other than those existing on 28 days before the last date of submission of price bid i.e (date to be entered in Agreement) is imposed in India under a statute or law during the currency of the Contract and the Contractor becomes legally liable thereunder to and actually pays the same for bonafide use on the Works contracted, then the Contractor shall immediately inform the Engineer-in- Charge in this regard. The Employer will reimburse the same to the Contractor on production of satisfactory proof of payment, provided that the amount thus claimed is not paid under Price variation clause 46 of General Conditions of the Contract. Provided always that in the event of variation in the rates of royalty charges/fresh levy of royalty on materials, the same shall be reimbursed to or recovered from Contractor upon submission of satisfactory documentary evidence of having made the payment at revised rates.

47.3 The Contractor's staff and labour will be liable to pay personal income taxes in respect of such of their salaries and wages as are chargeable under the laws and regulations for the time being in force, and the Contractor shall perform such duties in regard to such deductions thereof as may be imposed on him by such laws and regulations.

47.4 Provided further that, the Contractor shall not be entitled for reimbursement under Sub-clause 47.1 & 47.2 if the changes in the existing tax or duty or levy or imposition of new tax or duty or levy as mentioned in Sub- clause 47.1 & 47.2 pertains to indirect transactions between Contractor and any third party (e.g. Tax(es) on Insurance Premium).

47.5 Notwithstanding anything contained elsewhere in the contract, the Employer shall deduct at source from the payment due to the Contractor, the taxes as required to be deducted under applicable Tax Act or Rule. The amounts so deducted shall be deposited by the Engineer-in-charge with the Tax authorities as per Law. Immediately thereafter, the Engineer-in-charge shall inform the Contractor of the detailed calculations of such deductions and shall provide the Contractor with the corresponding receipts from the tax authorities. It is for the Contractor to deal with the Tax authorities directly in respect of any claim or refund relating to the above deductions and the Employer shall not be liable or responsible for any claims or payments or reimbursement in this regard.

47.6 Invoices and other documents submitted by contractor for payment under Interim Payment Certificate/Final Payment Certificate, or any other payment under the contract shall be in accordance with the GST Law.

47.7 The contractor shall furnish a certificate along with Interim Payment Certificate/Final Payment Certificate that GST payable by him has been deposited / will be deposited to the Govt. Treasury.

CLAUSE-48 : PAYMENT OF FINAL BILL:

The final bill shall be submitted by the Contractor within one month of the date fixed for completion of the Work or of the date the Certificate of Completion furnished by the Engineer-in-Charge. No further claim in this regard unless as specified herein under shall be entertained. Payment shall be made within 03 months, of the submission of Final bill. The clarification, if any, required on any item of final bill, shall be sought by the EIC within a period of 45 days. The Contractor shall be required to submit his clarifications within next 45 days. If there shall be any dispute about any item or items of the work, then the undisputed item or items only shall be paid within the said period of three months. The Contractor shall submit a list of the disputed items within thirty days from the disallowance thereof and if he fails to do so, his claim shall be deemed to have been fully waived and absolutely extinguished. Provided further the Employer shall not be liable to the Contractor for any matter or thing arising out of or in connection with the Contract or execution of the Works, unless the Contractor shall have included a claim in respect thereof in his Final Bill.

The contractor with RA bill / Final Bill shall submit a certificate for compliance of integrity pact & provisions of contract and certificate for compliance of BRSR Policy of Employer in the format prescribed at Schedule-D.

CLAUSE-49: OVER PAYMENT AND UNDER PAYMENT:

49.1 Whenever any claim whatsoever for the payment of a sum of money to the Employer arises out of or under this Contract against the Contractor, the same may be deducted by the Employer from any sum then due or which

at any time thereafter may become due to the Contractor under this Contract and failing that under any other contract with the Employer or from any other sum whatsoever due to the Contractor from the Employer or from his security deposit, or he shall pay the claim on demand.

49.2 The Employer reserve the right to carry out post- payment audit and technical examination of the final bill including all supporting vouchers, abstracts, etc. The Employer further reserves the right to enforce recovery of any overpayment when detected, notwithstanding the fact that the amount of the final bill may be included by one of the parties as an item of dispute before an arbitrator appointed under clause 55 of this Contract and notwithstanding the fact that the amount of the final bill figures in the arbitration award.

49.3 If as a result of such audit and technical examination any overpayment is discovered in respect of any work done by the Contractor or alleged to have been done by him under the Contract, it shall be recovered by the Employer from the Contractor by any or all of the methods prescribed above, and if any under-payment is discovered, the amount shall be duly paid to the Contractor by the Employer.

49.4 Provided that the aforesaid right of the Employer to adjust overpayments against amounts due to the Contractor under any other contract with the Employer shall not extend beyond the period of two years from the date of payment of the final bill or in case the final bill is a MINUS bill, from the date the amount payable by the Contractor under the MINUS final bill is communicated to the Contractor.

49.5 Any sum of money due and payable to the Contractor (including the security deposit returnable to him) under the Contract may be withheld or retained by way of lien by the Engineer-in-Charge or Employer against any claim of the Employer or such other person or persons in respect of payment of a sum of money arising out of or under any other contract made by the Contractor with the Engineer-in-Charge or Employer or with such other person or persons.

The sum of money so withheld or retained under this clause by the Engineer-in-Charge or Employer will be kept withheld or retained as such by the Engineer-in- Charge or Employer or till his claim arising out of in the same Contract or any other contract is either mutually settled or determined by the arbitrator under Clause 55 hereof, or by the competent court.

CLAUSE-50 : TRAINING OF APPRENTICES:

The Contractor shall, during the currency of the Contract, engage and also ensure engagement by his sub- contractor and other employed by the Contractor in connection with the Works, such number of apprentices and in such categories for such periods as may be required under the Apprenticeship Act 1961 as amended in 2014 and he shall be responsible

for all obligations of the Employer under the aforesaid Act, including the liability to make payment to Apprentices as required under the Act.

CLAUSE-51 : CONTRACT MATTERS TO BE TREATED AS CONFIDENTIAL:

51.1 All documents, correspondence, decisions and orders concerning the Contract shall be considered as confidential and/or restricted in nature by the Contractor and he shall not divulge or allow access to them by any unauthorized person.

51.2 The Contractor shall take necessary steps to ensure that all persons employed on any work in connection with this Contract have noted that the Indian Official Secret Act, 1923 (XIX of 1923) applies to them and shall continue so to apply even after the execution of such Works under the Contract.

CLAUSE-52: LAWS GOVERNING THE CONTRACT:

Unless otherwise hereinafter provided, this Contract shall be construed, interpreted and governed by laws of India.

CLAUSE-53: PROCEDURE FOR CLAIMS:

If the Contractor considers himself to be entitled to any extension of the Time for Completion and/or any additional payment, under any Clause of these Conditions or otherwise in connection with the Contract, the Contractor shall give notice to the Engineer, describing the event or circumstance giving rise to the claim. The notice shall be given as soon as practicable, and not later than 15 days after the Contractor became aware, or should have become aware, of the event or circumstance.

If the Contractor fails to give notice of a claim within such period of 15 days, the Time for Completion shall not be extended, the Contractor shall not be entitled to additional payment, and the Employer shall be discharged from all liability in connection with the claim. Otherwise, the following provisions of this Sub-Clause shall apply.

The Contractor shall also submit any other notices which are required by the Contract, and supporting particulars for the claim, all as relevant to such event or circumstance.

The Contractor shall keep such contemporary records as may be necessary to substantiate any claim, either on the Site or at another location acceptable to the Engineer. Without admitting the Employer's liability, the Engineer may, after receiving any notice under the is Sub-Clause, monitor the record-keeping and/or instruct the Contractor to keep further contemporary records. The Contractor shall permit the Engineer to inspect all these records, and shall (if instructed) submit copies to the EIC/Engineer.

Within 90 days after the Contractor became aware (or should have become aware) of the event or circumstance giving rise to the claim or within such other period as may be proposed by the Contractor and approved by the Engineer, the Contractor shall send to the Engineer a fully detailed claim which includes full supporting particulars of the basis of the claim and of the extension of time and/or additional payment claimed.

If the event or circumstance giving rise to the claim has a continuing effect:

a) This fully detailed claim shall be considered as interim.

b) The Contractor shall send further interim claims at monthly intervals, giving the accumulated delay and/or amount claimed and such further particulars as the Engineer may reasonably require; and

c) The Contractor shall send a final claim within 15 days after the end of the effects resulting from the event or circumstance or within such other period as may be proposed by the Contractor and approved by the Engineer.

If the Contractor fails to submit the fully detailed claim which includes full supporting particulars of the basis of the claim and of the extension of Time for Completion within such period as specified above, the Time for Completion shall not be extended and the Contractor shall not be entitled to additional payment/claim and the Employer shall be discharged from all liability in connection with the claim.

Within 45 days after receiving all particulars supporting claim or within such other period as may be proposed by the Engineer and approved by the Contractor, the Engineer shall respond with approval or with disapproval and detailed comments on the admissibility of claim. If the Contractor does not receive the approval or disapproval from the Engineer on the admissibility of the Claim within such time, then the claim made by the Contractor will be deemed to have been considered admissible. The detailed evaluation of Claim (if considered admissible) shall be done by the Engineer in due course of time.

Each Payment Certificate shall include such amounts for any claim as have been reasonably substantiated as due under the relevant provision of the Contract. Unless and until the particulars supplied are sufficient to substantiate the whole of the claim under the contract, the Contractor shall only be entitled to payment for such part of the claim as he has been able to substantiate.

Further, the resources (Equipment/Manpower) are solely the Contractor's estimate and the Contractor has committed to deploy the resources to complete the Works within the Time for Completion. No claims will be entertained on the grounds that there has been less progress than anticipated using these resources. The causes or hindrances would have to be established by the Contractor independently. No payments would be made towards the expenses incurred on deploying the additional resources as such unless expressly agreed by the Employer in writing.

No interest shall be paid by the Employer on the disputed/ claimed amount for the period up to

determination and notification of the same to the Contractor by the Engineer.

The Engineer shall proceed in accordance with Sub-Clause to agree or determine the extension (if any) of the Time for Completion (before or after its expiry) in accordance with Sub-Clause 39 [Time for Completion and Extensions] to which the Contractor is entitled under the Contract.

The requirements of this Sub-Clause are in addition to those of any other Sub-Clause which may apply to a claim. If the Contractor fails to comply with this or another Sub• Clause in relation to any claim, any extension of time shall take account of the extent (if any) to which the failure has prevented or prejudiced proper investigation of the claim, unless the claim is excluded under the second paragraph of this Sub- Clause.

CLAUSE-54: SUM PAYABLE BY WAY OF COMPENSATION TO BE CONSIDERED AS REASONABLE WITHOUT REFERENCE TO ACTUAL LOSS:

All sums payable by way of compensation to the Employer under any of these conditions shall be considered as reasonable compensation without reference to the actual loss or damage sustained and whether or not damage shall have been sustained.

CLAUSE -55: SETTLEMENT OF DISPUTES

55.1 Amicable Settlement

55.1.1 If any dispute arises between the Employer and the Contractor arising out of the Contract, whether during the execution of the Works or after their completion and whether before or after the repudiation or after termination of Contract, including any disagreement by either Party with any action, inaction, opinion, instruction, determination, certificate or valuation of the Employer, an attempt shall be made to resolve the matter in dispute amicably.

Any dispute, in respect of which the Employer and the Contractor have failed to reach at an amicable settlement pursuant to GCC Clause 55.1.1, shall be finally settled by reference to Commercial / Competent Court.

55.2: Settlement of commercial disputes between Central Public Sector Enterprises CPSE(s) / Port Trusts *inter* se and also between CPSEs and Government Departments /Organizations (excluding disputes related to Railways, Income Tax, Customs & Excise Departments) - Administrative Mechanism for Resolution of CPSEs Disputes (AMRCD).

In the event of any dispute or difference relating to the interpretation and application of the provisions of commercial contract(s) between Central Public Sector Enterprises (CPSEs)/ Port Trusts inter se and also between CPSEs and Government Department(s)/Organization(s) (excluding disputes related to Railways,

Income Tax, Customs & Excise Departments), such dispute or difference shall be taken up by either party for its resolution through AMRCD as mentioned in DPE OM No. 05/0003/2019-

FTS-10937 dated 14th December, 2022 (Annexure-IV) and the decision of AMRCD on the said dispute will be binding on both the parties.

This provision is applicable to disputes with Central PSEs / Port Trusts / Government Department(s) / Organization(s) (excluding disputes related to Railways, Income Tax, Customs & Excise Departments) only.

CLAUSE 56: DEFECTS LIABILITY CERTIFICATE & UNFULFILLED OBLIGATIONS:

The Contract shall not be considered as completed until a Defects Liability Certificate shall have been signed by the Engineer-in-Charge and delivered to the Contractor, stating the date on which the Contractor shall have completed his obligations to execute and complete the Works and remedy any defects therein to the Engineer-in-Charge's satisfaction. The Defects Liability Certificate shall be given by the Engineer-in-Charge within 28 days after the expiration of the Defects Liability Period.

Notwithstanding the issue of the Defects Liability Certificate the Contractor and the Employer shall remain liable for the fulfillment of any obligation incurred under the provisions of the Contract prior to the issue of the Defects Liability Certificate which remains unperformed at the time such Defects Liability Certificate is issued and, for the purposes of determining the nature and extent of any such obligation, the Contract shall be deemed to remain in force between the parties to the Contract.

CLAUSE 57: ECOLOGICAL BALANCE

57.1 The Contractor shall be required to ensure that there shall be no indiscriminate felling of trees by him or his labourers or their family members and he will be solely responsible for their acts in this regard. The Contractor shall try to maintain ecological balance by preventing deforestation, water pollution and defacing of natural landscape in the vicinity of work areas. The Contractor shall so conduct his construction operations as to prevent an unnecessary destruction of, scarring or defacing the natural surroundings in the vicinity of the work area. In order to maintain the ecological balance, the Contractor shall specifically observe the following instructions:

a) Where unnecessary destruction, scarring, damage or defacing may occur as a result of the Contractor's operation, the same shall be repaired, replanted or otherwise corrected at the Contractor's expense. The Contractor will prevent scattering of rocks and other debris outside the work areas. All work areas shall be smoothed and graded in a manner to conform to the natural appearance of the landscape as directed by the Engineer-in-Charge.

b) All trees and shrubs, which are not specifically required to be cleared or removed for construction purposes, shall be preserved and shall be protected from any damage that may be caused by the Contractor's construction operation and equipment. The removal of trees or shrubs will be permitted only after prior approval by the Engineer-in-charge. Special care shall be exercised where trees or shrubs are exposed to injuries by construction equipment,

blasting, and excavating, dumping, chemical damage or other operation and the Contractor shall adequately protect such trees by use of protective barriers or other methods approved by the Engineer-in-Charge. Trees shall not be used for anchorage.

c) The Contractor's construction activities shall be performed by methods that will prevent entrance or accidental spillage of solid matter contaminants, debris and other objectionable pollutants and wastage into river. Pollutants and wastes shall be disposed of in a manner and at sites approved by the Engineer in-Charge. The Contractor shall fully comply with Water (Prevention and Control of Pollution) Act, 1974 section -33(A).

d) In the Conduct of construction activities and operation of equipment, the Contractor shall utilise such practicable methods and devices as are reasonably available to control, prevent and otherwise minimize air pollution. The contractor shall fully comply with Air (Prevention and Control of Pollution) Act, 1981 section -31(A).

e) Burning of materials resulting from clearing of tree, bush, combustible construction materials and rubbish may be permitted only when atmospheric conditions for burning are considered favourable.

f) The Contractor shall be required to prevent flowing of debris and muck in to the river. Necessary retaining structures like walls/crates etc shall be constructed for the purpose. The Contractor shall also stabilize the muck fully i.e. consolidation and compaction of the muck shall be carried out in the muck dumpsites before handing it over to the Employer at the end of construction period.

g) All the equipment which are likely to generate high noise levels are to be fully equipped (with noise reduction measures) to meet the ambient noise control standards.

57.2 Separate payment will not be admissible to the Contractor for complying with the provisions of this clause except the protection work as specially provided for in BOQ. All other costs shall be deemed to have been included in the items mentioned in the Bill of Quantities. If any provision(s) is not complied with, within a reasonable time even after issue of a notice in this respect, the necessary operations would be carried out by the Engineer-in-charge at the cost of the Contractor.

CLAUSE 58: GENERAL:

Save and except as expressly provided elsewhere in this Contract all costs, expenses, charges and liabilities for the completion of the Works in accordance with the Contract and/or for the due and faithful performance and/or the fulfillment of all of the Contractor's obligations under the Contract including furnishing of bank guarantees / Insurance Surety Bonds to the Employer pursuant to the Contract shall be to the account of and be borne by the Contractor and shall be deemed to be included in the unit rates provided for in the Bill of Quantities and the Employer shall not be liable in any manner whatsoever therefore.

Whenever any claim whatsoever for the payment of a sum of money to the Employer arises out of or under this contract against the Contractor, the same may be deducted by the Employer from any sum then due or which at any time thereafter may become due to the Contractor under this Contract and failing, that under any other contract between the Employer and the Contractor or from any other sum whatsoever due to the Contractor from the Employer or from his Security Deposit or he shall pay the claim on demand.

~~Clause 59: Employment of Skilled/Semiskilled workers:~~

~~The contractor shall, at all stages of work, deploy skilled/semi-skilled tradesmen who are qualified and possess certificate in particular trade from CPWD Training Institute/Industrial Training Institute/National Institute of construction Management and Research (NICMAR)/ National Academy of Construction, CDIC or any similar reputed and recognized Institute managed/certified by State/Central Government. The number of such qualified tradesmen shall not be less than 20% of total skilled/semi-skilled workers required in each trade at any stage of work.~~

~~The Contractor shall submit number of man days required in respect of each trade, it's scheduling and the list of qualified tradesmen along with requisite certificate from recognized Institute to Engineer in charge for approval. Notwithstanding such approval, if the tradesmen are found to have inadequate skill to execute the work of respective trade, the contractor shall substitute such tradesmen within two days of written notice from Engineer-in-Charge. Failure on the part of contractor to obtain approval of Engineer- In-Charge or failure to deploy qualified tradesmen will attract a compensation to be paid by contractor at the rate of Rs. 100 per such tradesman per day. Decision of Engineer in Charge as to whether particular tradesman possesses requisite skill and amount of compensation in case of default shall be final and binding.~~

HINDRANCE REGISTER

Annexure-I

Refer Clause 39.2of GCC)

NAME OF PROJECT: _____

1. Name of Work: _____

2. Agreement No._____

3. Executing Agency: _____

Sl. No.	Nature/ Reason of Hindrance	Item/ Component of works which could not be executed on account of this Hindrance	Date of Start of Hindrance	Date of removal of Hindrance	Overlapping period (if any)	Net Hindrance in days	Signature of Engineer's Representative	Signature of Contractor	Remarks
1	2	3	4	5	6	7	8	9	10

Schedules

Schedule-A **Schedule of Quantities and Prices**

Schedule-B **Issue of Departmental materials to the Contractor**

Schedule-C **Compensation for delay**

Schedule-D **Schedule for chargeable interest rates against advances, completion time, defect liability period, percentages of various components for price variation/adjustment**

~~**Schedule-E** **Construction Schedule**~~

~~**Schedule-F** **Construction Plant, Equipment & machinery and its Planning Schedule**~~

~~**Schedule-G** **Construction methodology duly supported with broad calculations (separate sheet to be attached)**~~

SCHEDULE-A

GENERAL SUMMARY ABSTRACT

SCHEDULE OF QUANTITIES AND PRICES (BILL OF QUANTITIES)

Separate '**Schedule of Quantities and Price (Bill of Quantities)**' attached as **Section-VII** of Bid document and shall be filled by the Bidder in E-Tendering mode.

Signature of Bidder

~~SCHEDULE-B~~

~~ISSUE OF DEPARTMENTAL MATERIALS TO THECONTRACTOR~~

~~(Refer Clause 23 of General Conditions of Contract)~~

Sl. No.	Particulars of materials to be issued.	Unit	Stock Issue Rate (Rs.)	Place of issue.

Note:

~~Remarks: Penal recovery rate in case of excess consumption of materials shall be 25% more than the prevailing stock issue rates at the time of invitation of bids. Depending upon time required for award works as well as duration of construction period for the work in question the escalation factor shall be duly accounted for while working out the penal recovery rate.~~

~~Penal recovery rate shall be filled in by the Project at the against each of the material to be issued free of cost by the Employer and the above remarks be deleted in the Bid document.~~

SCHEDULE-C

SCHEDULE FOR ACHIEVEMENT OF WORK AND COMPENSATION FOR DELAY

(Refer Clause-40 of General Conditions of Contract and Schedule-E)

Sl. No.	Description Mile Stones	Schedule completion period from the date of issue of Letter of Acceptance.	Compensation for delay
1.	Completion of works as a whole	**(120 days)**	**0.035% of Contract Price per day of Delay**

SCHEDULE - D

Schedule for chargeable interest rates against advances, completion time, defect liability period, percentages of various components for price variation/adjustment

S.NO.	CLAUSE No.	DESCRIPTION	STIPULATION
1	3.2	Performance Security Deposit	2% of Contract Price
2	3.3	Retention Money	3% of Contract Price
~~3~~	~~13.1.1~~	~~Mobilisation Advance Limit~~	~~5% of Contract Price Sub Clause 13.1.1 Applicable for Works with Estimated Cost of more than 1.0 Cr.~~
~~4~~	~~13.1.1(i)~~	~~Simple interest per Annum on Mobilization Advance~~	~~State Bank of India MCLR for 3 years plus margin of 150 basis points as on 28 days prior to Price Bid submission date.~~
~~5~~	~~13.1.1(ii)~~	~~Initial limit~~	~~2% of contract Price~~
~~6~~	~~13.1.2~~	~~Advance for Construction Equipment limited to~~	~~10% of contract Price Sub Clause 13.1.2 Applicable for Works with Estimated Cost of more than 1.0 Cr.~~
~~7~~	~~13.1.2(i)~~	~~Simple interest per Annum on sum advanced for purchase of new equipment~~	~~State Bank of India MCLR for 3 years plus margin of 150 basis points as on 28 days prior to Price Bid submission date~~
8	18.2, (iii) GCC	Contractor's Overheads, Profits and Supervision Charges Contractor's Overheads, Supervision, Profits etc. on Material/Construction Equipment issued by Employer	**20 %** **10 %**

~~9~~	~~34.4(a)~~	~~An addition to Contract Price to account for the materials which is to be issued to the Contractor free of cost by the Employer~~	~~__25 %_____per cent~~
10	34.4(b)	Deductibles: 5% of each loss subject	
		to minimum of Rs. …….	
11	34.9 GCC	Public Liability Limits plus Property Liability Limits not exceeding	10% of Contract Price In case, the total liability exceeds the limit of 10% of contract price, the minimum liability as mentioned under Clause 34.9(i) & 34.9(ii) shall be applicable.
12	39.1	Time allowed for execution of the Work as a whole (Completion period)	**120 Days**
13	43	Defects Liability Period	**12 months**
14	45.7	Interest Rate for Delayed Payment	____6%___per Annum
~~15~~	~~45.8~~	~~Materials intended for the Works~~	~~Cement & Steel~~
~~16~~	~~45.12~~	~~Certificate for compliance of BRSR Policy~~	~~Placed at Annexure-II~~
~~17~~	~~46.1~~	~~Price Adjustment/Variation~~	~~Applicable for Works having original completion Time of more than 18 (Eighteen) months~~
		~~i) Percentage of labour component (other than unskilled)in the Value of Work (L)~~	~~_____per cent~~
		~~ii) Percentage of labour component (unskilled) in the Value of work (U)~~	~~_____per cent~~
		~~iii) Percentage of Material component in the Value of Work(excluding Departmental material) (C, S, E & M)~~	~~_____per cent~~
		~~iv) percentage of POL component in the value of work(P) (Place of Nearest Indian Oil Depot for Diesel Price)~~	~~_____per cent~~

18	48	i) Certificate for compliance of Integrity Pact & Provisions of Contract, ~~ii) Certificate for compliance of BRSR Policy~~	Placed at Annexure-III ~~Placed at Annexure-II~~

* Shall not be more than 20.

Shall not be more than 10.

~~**Annexure-II**~~

~~**Certificate for compliance of BRSR Policy**~~

~~[Certificate to be submitted by Contractors on their letter head on quarterly basis with every RA Bill and Final bill]~~

~~Name of the work: ……..…..~~

~~RA Bill No. …… (Period ……) / Final Bill~~

~~It is certified that;~~

~~We, M/s …….(Name of Contractor) have complied with all the provisions of Business Responsibility and Sustainability Reporting (BRSR) Policy of Employer as per following details:~~

~~**E/S/G**~~	~~**Topic**~~	~~**Sr. No.**~~	~~**Questions**~~	~~**Response**~~	~~**If Yes, provide link for supporting documents**~~
~~**Environment**~~	~~**Environmental Policies and Processes**~~	~~1~~	~~Does your company have an environment or sustainability policy?~~	-	-
		~~2~~	~~Does your company have Environment Management System (ISO 14001 or equivalent) in place~~	-	-
		~~3~~	~~Does your company have climate change strategy in place?~~	-	-
	~~**Energy & Emission**~~	4	~~Has your company taken any initiatives to ensure that the energy mix has a dominance of cleaner sources of energy? Has your company set targets on renewable energy procurement?~~	-	-
		~~5~~	~~Does your company assess, monitor and report its carbon and/or other GHG Emissions (Scope 1, 2 and 3 emissions) through recognised greenhouse gas emission calculation methodology?~~	-	-
	~~**Waste Management**~~	~~6~~	~~Does your company have written policy/ procedures on waste management?~~	-	-
		~~7~~	~~Does the company have targets on resource efficiency such as waste minimization, water recycle and reuse?~~	-	-
		~~8~~	~~Does your company maintain records and monitor the trends of different streams of waste generated inleuding hazardous wastes, plastic waste, batteries waste, e-Waste, etc.~~	-	-
		~~9~~	~~Has your company identified and signed formal agreements with authorised agencies for disposal of such wastes?~~		-
	~~**Water Management**~~	~~10~~	~~Does your company maintain records of water use and the various water sources?~~	-	-
		~~11~~	~~Does your company have adequate treatment facilities for raw water, process effluent and sewage?~~	-	-

~~E/S/G~~	~~Topic~~	~~Sr. No.~~	~~Questions~~	~~Response~~	~~If Yes, provide link for supporting documents~~
		~~12~~	~~Does your company conduct periodic quality monitoring of treated wastewater and treated raw water from accredited laboratories?~~	-	-
~~Social~~	~~Health and Safety~~	~~13~~	~~Does your company have in place a formal health and safety policy?~~	-	-
		~~14~~	~~Is your company certified to ISO 45001/ 18001/ 9001?~~	-	-
		~~15~~	~~Does your company have formal procedure to record, track and monitor accident/ incident that occur in their premises?~~	-	-
		~~16~~	~~Does your company have an onsite Emergency Response plan (ERP)?~~	-	-
		~~17~~	~~Does your company regularly inspect the available firefighting equipment such as extinguishers, hydrant system, etc.?~~	-	-
		~~18~~	~~Does your company conduct regular medical examination for all its employees and workers?~~	-	-
	~~Legal Compliance~~	~~19~~	~~Does your company maintain legal register or tracker to ensure statutory compliances?~~	-	-
		~~20~~	~~Has your company obtained valid operating licenses, as required under the national and local laws of the region where they are operating:~~ ~~- Consent to Establish and Operate~~ ~~- Waste Authorization~~ ~~- Factory License~~ ~~- Fire NOC~~	-	-
		~~21~~	~~Does your company conduct periodic monitoring of emissions such as stack monitoring, ambient noise level monitoring, etc.?~~	-	-
		~~22~~	~~Did your company receive any showcause or closure notices/ penalties/ fines for non-compliance with respect to EHS and social regulatory requirements?~~	-	-
	~~Social (Community engagement and labour conditions)~~	~~23~~	~~Does your company have a documented policy on the following aspects:~~ ~~- Prohibition of child and forced labour~~ ~~- Sexual harassment~~ ~~- Code of Conduct~~ ~~- Equal Opportunities and non-discrimination~~ ~~- Working hours~~ ~~- Fair and equal wages~~ ~~- Leave policy~~	-	-
		~~24~~	~~Does your company pay overtime under legal rate to employees?~~	-	-

~~E/S/G~~	~~Topic~~	~~Sr. No.~~	~~Questions~~	~~Response~~	~~If Yes, provide link for supporting documents~~
		~~25~~	~~Did your company experience any human rights violation against the surrounding communities in last 5 years?~~	-	-
	~~Customer Welfare~~	~~26~~	~~Does your company provide communication channel/ grievance and remediation action to customers?~~	-	-
		~~27~~	~~Does your company train its employees in handling and resolving customer complaints?~~	-	-
	~~Employee Engagement, Diversity and Inclusion~~	~~28~~	~~Does your company has formal programs on:~~ ~~- Induction training~~ ~~- Refresher training~~ ~~- On job training~~	-	-
		~~29~~	~~Does your company have KPIs on diversity and inclusion that needs to be achieved during hiring, performance and development / appraisals etc.?~~	-	-
		~~30~~	~~Does your company conduct a periodic pay equity survey as well as employee satisfaction survey? If yes, how often is this conducted?~~	-	-
	~~Supply Chain~~	~~31~~	~~Does your company follow a sustainable procurement plan or responsible sourcing program?~~	-	-
		~~32~~	~~Is there an environment and social criteria for screening the suppliers and vendors?~~	-	-
~~Governance~~	~~Policy and Strategy~~	~~33~~	~~Does the organization have a formal board diversity policy that clearly requires diversity factors such as gender, race, ethnicity, country of origin, nationality or cultural background in the board nomination process?~~	-	-
		~~34~~	~~Does your company have a specific ESG budget and ESG training programs?~~	-	-
	~~Business Ethics~~	~~35~~	~~Do your company have written procedures on:~~ ~~- Confidentiality of information~~ ~~- Conflicts of interest~~ ~~- Antitrust/anti-competitive practices~~	-	-
		~~36~~	~~Did your company face any criminal charges/ litigations/ penalties associated with issues such as anti-bribery, fraud, corruption, unfair labour practices, human rights abuses, and other malpractices?~~	-	-
		~~37~~	~~Was your company subjected to negative publicity in light of breach of integrity?~~	-	-
		~~38~~	~~Is your company presently involved in any litigation that could impact its financial stability?~~	-	-

.....~~We M/s (name of company) hereby confirm that the above declared information is true. We M/s~~
~~……..(name of company) declare that we accept and are in compliance with the requirements stated in the terms of engagement with NHPC.~~

~~Authorized Representative of Contractor.~~

Annexure-III

Certificate for compliance of Integrity Pact and Provisions of Contract

[Certificate to be submitted by Contractors on their letter head along with each and every bill (whether running or final)]

"**Repair of damaged at TRT area during monsoon 2025 at Salal Power Station, Jyotipuram**"

RA Bill No. …… (Period) / Final Bill

It is certified that;

1. We, M/s …….(Name of Contractor) and M/s …… (Name of approved Sub- Contractor(s), if applicable) have complied with all the provisions of Integrity Pact contained in the contract agreement of the subject work.
2. The work is being / has been carried out as per provisions of the Contract.

Authorized Representative of Contractor.

Annexure-IV

DPE OM No. 05/0003/2019-FTS-10937 dated 14th December, 2022

FORM-X

Sr.	Data Particular	Data
1	Name	NHPC LIMITED, Salal Power Station
2	Type of Supplier i.e. whether registered or unregistered (for B2B Suppliers).	Registered
3	GSTN no (for B2B Suppliers)	01AAACN0149C3ZB
4	Registered addresses of the Suppliers under GST along with State Code and PIN Code (for B2B Suppliers)	SALAL POWER STATION P.O. Jyotipuram, Distt. Reasi, Jammu & Kashmir , PIN-182312, State Code-01
5	Present location of the project declared as Additional Place of business.	SALAL POWER STATION P.O. Jyotipuram, Distt. Reasi, Jammu & Kashmir , PIN-182312, State Code-01
6	PAN	AAACN0149C
7	TAN No.	RTKN01104F
8	UID no. in case of Embassy/UN	-NOT APPLICABLE -
9	Status of Suppliers i.e. whether SEZ, EOU, DTA, Government, Local Authority	-NOT APPLICABLE -
10	Contact Person	Sh. Ajay Kumar Singhal Dy. General Manager (Finance)
11	Email	salal-finance@nhpc.nic.in
12	Mobile No.	094122-19519, 98101-27381
13	Phone No	01991-255807

FORM-XI

Sr.	Data Particular	Data
1	Supplier name	
2	-Type of Supplier i.e. whether registered or unregistered (for B2B Suppliers). -If unregistered , Specify the reasons for not obtaining registration.	Registered /Unregistered. -If unregistered, specify the reason:
3	ARN NO. GSTN no (for B2B Suppliers)	
4	Registered addresses of the Suppliers under GST along with state code and pin code (for B2B Suppliers)	
5	Present location of the supplier (If the same is different from the registered address vide Sl. no 4 above) declared as Additional Place of business.	
6	PAN no. of the supplier.	
7	UID no. in case of Embassy/UN.	
8	Status of Suppliers i.e. whether SEZ, EOU, DTA, Government, Local Authority.	
9	Email address of the Supplier.	
10	Phone no. of the Supplier.	
11	**HSN/SAC Code-wise details of all supplies.**	

Disclaimer:

I) It is intimated that NHPC Ltd. shall not be responsible in any manner, whatsoever, for the failure of suppliers to claim any credit/off-set or any other benefit under GST due to non-submission/incorrect or incomplete or late submission of GST details vide above Annexure. NHPC Ltd disclaims all liability (current or future), penalty, interest etc., under the GST that they may rise due to any such bid reason whatsoever.

II) It is further intimated that, in addition furnishing the requested data will also be in the interest of all suppliers for timely settlement of their bills.

Signature & Seal of the bidder

~~SCHEDULE–E~~

~~CONSTRUCTION SCHEDULE AS PER SCC~~

SCHEDUL-F

CONSTRUCTION PLANT, EQUIPMENT & MACHINERYAND ITSPLANNINGSCHEDULE

(To be furnished by the Tenderer)

Sl. No.	Name of Equipment	Make & Model	Capacity	Total No. of equipment	Source/ sources of Mobilisation	Year of purchase	Whether New/Old	Hours run	No. of overhauling already done	Value of spares available	No. to be deployed for Month wise phasing in accordance with	Remarks
1	2	3	4	5	6	7	8	9	10	11	12	13

Note Under the head "source/sources of mobilisation", the Contractor would clearly indicate the source(s) of equipment and the time when it could be released from his existing works (s) /contract (s) for work (s) / contract (s) in question For the new equipment the Contractor would indicate the source of purchase and the likely delivery after placement of order.

~~SCHEDULE-G~~

~~CONSTRUCTION METHODOLOGY~~

~~(To be submitted in separate sheet)~~

एनएचपीसी लिमिटेड

(भारत सरकार का एक नवरत्न उद्यम)

NHPC Limited

(A Government of India Navratna Enterprise)

SECTION V

FORMS

Form-1: Agreement Form

Form-2: Bank Guarantee format for Earnest Money.

Form-3: Format of Insurance Surety Bond for Earnest Money.

Form-4: Bank Guarantee format for Performance Security.

Form-5: Format of Insurance Surety Bond for Performance Security.

~~**Form-6:** Bank Guarantee format for Advance Payment.~~

Form-7: Bank Guarantee format for Release/Payment of Retention Money.

Form-8: ECS FORM

~~**Form-9** Indenture for Secured Advances~~

FORM-1

AGREEMENT FORM

(To be executed on non-judicial Stamp paper of appropriate value)

AGREEMENT

This agreement is made on_____day of_____Two Thousand-------between the NHPC LIMITED, registered under the Laws of India and having its registered Office at NHPC Office Complex, Sector-33, Faridabad (Haryana)-121 003. (hereinafter referred to as the 'Owner' which expression shall unless repugnant to the context or meaning thereof, called the 'Employer' which expression shall unless repugnant to the subject or context include its administrators, successors and assigns) of the one part and M/s _____ registered under the_____ _____Act and having its principal / registered office at _____(herein after called "the Contractor" which expression shall unless repugnant to the context or meaning thereof, include its successors and permitted assigns) of the other part.

WHEREAS the Employer is desirous that certain Works should be executed by the Contractor, viz: ..... and has accepted the Bid of the Contractor for the execution and completion of such Works and the remedying of any defects therein at the cost of RS. ------- (Rupees).

NOW THIS AGREEMENT WITNESSETH as follows:

1. In this Agreement, words and expressions shall have the same meanings as are respectively assigned to them in the Conditions of Contract hereinafter referred to.

2. The following documents shall be deemed to form and be read and construed as part of this Agreement, viz:

   a) the Agreement
   b) the Letter of Acceptance issued by Employer;
   c) the Special Conditions of Contract (SCC);
   d) the General Conditions of Contract (GCC);
   e) the Technical Specifications;
   f) the Schedule of Quantities and Price(Bill of Quantities);
   g) the Tender Drawings;

h) the Information for Bidder(s)

i) the Safety Manual.

j) any other document forming part of the Contract

3. In consideration of the payments to be made by the Employer to the Contractor as hereinafter mentioned, the Contractor hereby covenants with the Employer to execute and complete the Works and remedy the defects therein in conformity in all respect in accordance with the provisions of the Contract.

4. The Employer hereby covenants to pay the Contractor in consideration of the execution and completion of the works and remedying of defects therein the Contract Price or such other sum as may become payable under the provisions of the Contract at the time and in the manner prescribed by the Contract.

In Witness whereof the parties hereto have caused this Agreement to be executed the day and year first before written, at(name of place).

The Common Seal of _____wa
s hereunto affixed in the presence of:

For and on behalf of the Contractor	For and on behalf of NHPC Limited
Signature----------	Signature----------
(Designation)----------	(Designation) ----------
Place:	Place:
Witnessed by:	Witnessed by:
Name & Address	Name & Address

FORM-2

Bank Guarantee Format for Earnest Money

(To be executed on Non-Judicial Stamp Paper of Appropriate value)

Date:_____

(Name of Contract)

To:
NHPC Limited,
Sector 33, Faridabad, Haryana

WHEREAS (name of Bidder) (hereinafter called "the Bidder") has submitted its Bid dated (date of bid) for the performance of the above named Contract (hereinafter called "the Bid")

KNOW ALL PERSONS by these present that We (name of Bank) of (address of bank) (hereinafter called "the Bank"), are bound unto NHPC Limited (a Govt. of India Enterprises) (hereinafter called "the Employer") for the sum of: (amount), for which payment well and truly to be made to the said Employer, the Bank binds itself, its successors and assigns by these presents.

THE CONDITIONS of this obligation are as follows:

1. If the Bidder (a) withdraws or modifies its Bid during the period of bid validity, or (b) adopts corrupt or collusive or coercive or fraudulent practices or defaults under Integrity Pact.

2. If the Bidder, having been notified of the acceptance of its Bid by the Employer during the period of bid validity.
   a) fails or refuses to sign the Contract Agreement when required, or
   b) fails or refuses to submit the performance security in accordance with the Tender Documents.

We undertake to pay to the Employer up to the above amount upon receipt of its first written demand, without the Employer having to substantiate its demand, provided that in its demand the Employer will mention that the amount claimed by it is due, owing to the occurrence of one or both of the two above-named CONDITIONS, and specifying the occurred condition or conditions.

The Bank declares that this Bank Guarantee is issued by the Bank, utilizing the credit limit of M/s (name of contractor).

This guarantee will remain in force up to and including (date 90 days after the period of bid validity), and any demand in respect thereof must reach the Bank not later than the above date.

For and on behalf of the Bank

_____

in the capacity of

_____

Common Seal of the Bank with complete address including Tel./fax. Nos. Staff

Authority No. of the officer of the Bank/ Signatory

INSTRUCTIONS FOR EXECUTION OF BANK GUARANTEE FOR EANEST MONEY DEPOSIT

1. Bank Guarantee for Earnest Money Deposit should be executed on non-judicial Stamp papers of requisite value in accordance with the stamp Act if applicable to that particular state of Indian Union country of executing Bank, where executed. In case the same is issued by a first class International bank, the law prevalent in the country of execution shall prevail for the purpose of Stamp Duty on the Bank Guarantee. However, in such a case, the Bank Guarantee for Earnest Money Deposit shall be got confirmed by the Bidder through any Indian Scheduled/Nationalized Bank.

2. The executing officers of the Bank Guarantee for Earnest Money/Bid Security shall clearly indicate in (block letters) his name, designation, Power of Attorney No. / Signing Power No. as well as telephone/ fax numbers with full correspondence address of the issuing Guarantee etc.

3. Each page of the Bank guarantee for Earnest Money Deposit shall be duly signed/initialed by the executing officers and the last page shall be signed in full, indicating the particulars as aforesaid (sub-para 2) under the seal of the Bank.

4. Stamp paper shall be purchased in the name of Bank issuing the Bank Guarantee, after the date 'Notice Inviting Tender', not more than six (6) months prior to execution/ issuance of the Bank Guarantee. The name of the purchaser should appear at the back side of stamp paper in the Vendors Stamp. The issuing Bank shall be requested independently for verification/ confirmation of the Bank Guarantee issued, non- confirmation of which may lead to rejection of 'Bid Security'.

5. Irrevocable, valid and fully enforceable Bank Guarantee in favor of the employer (Name of Employer) issued by any scheduled bank approved by the Reserve bank of India which is acceptable to the Employer. The Bank Guarantee issued by a Foreign Bank shall be routed through the corresponding branch of such scheduled foreign banks in India or any scheduled Bank, acceptable to the employer.

6. Bank Guarantee for Bid security in original shall be submitted along with the Bid. However, the issuing Bank shall submit an unstamped duplicate copy of Bank Guarantee directly by registered post (A.D.) to the Employer (authority inviting tenders) with a forwarding letter.

FORM-3

Format of Insurance Surety Bond for Earnest Money Deposit

(To be executed on Non-Judicial Stamp Paper of Appropriate value)

Insurance Surety Bond No.....

Date:_____

(Name of Contract)

To: (Name and address of Employer)

WHEREAS (name of Bidder) (hereinafter called "the Bidder") has submitted its Bid dated (date of bid) for the performance of the above named Contract (hereinafter called "the Bid")

KNOW ALL PERSONS by these present that We ..... (Name of Insurance Company) of ..... (Address of Insurance Company) (Hereinafter called "the Surety"), are bound unto NHPC Limited (a Govt. of India Enterprises) (hereinafter called "the Employer") for the sum of (amount), for which payment well and truly to be made to the said Employer, the Surety binds itself, its successors and assigns by these presents. THE CONDITIONS of this obligation are as follows:

1. If the Bidder (a) withdraws or modifies its Bid during the period of bid validity, or (b) adopts corrupt or collusive or coercive or fraudulent practices or defaults under Integrity Pact.
2. If the Bidder, having been notified of the acceptance of its Bid by the Employer during the period of bid validity.
    a. fails or refuses to sign the Contract Agreement when required, or
    b. fails or refuses to submit the performance security in accordance with the Tender Documents.

We undertake to pay to the Employer up to the above amount upon receipt of its first written demand, without the Employer having to substantiate its demand, provided that in its demand the Employer will mention that the amount claimed by it is due, owing to the occurrence of one or both of the two above-named CONDITIONS, and specifying the occurred condition or conditions.

The Surety declares that this Insurance Surety Bond is issued by the ..... (name of Insurance Company) as per the applicable rules and regulations of Insurance Regulatory Development Authority of India (IRDAI).

This Insurance Surety Bond will remain in force up to and including (date 90 days after the period of bid validity), and any demand in respect thereof must reach the Surety not later than the above date.

For and on behalf of the Insurance Company

_____

in the capacity of

_____

Common Seal of the Insurance Company with complete address including Tel. Nos. / e-Mail Id.

Staff Authority No. of the officer of the Insurance Company /Signatory

<u>INSTRUCTIONS FOR EXECUTION OF INSURANCE SURETY BOND FOR EANEST MONEY DEPOSIT</u>

1. Insurance Surety Bond for Earnest Money Deposit should be executed on non-judicial Stamp papers of requisite value in accordance with the stamp Act if applicable to that particular state of Indian Union country of executing Insurance Company, where executed. In case the same is issued by an International Insurance Company (it should be registered under Insurance Act 1938 or as amended from time to time and approved by the Insurance Regulatory Development Authority of India (IRDAI)) the law prevalent in the country of execution shall prevail for the purpose of Stamp Duty on the Insurance Surety Bond. However, in such a case, the Insurance Surety Bond for Earnest Money Deposit shall be got confirmed by the Bidder through any Indian Scheduled/Nationalized Insurance Company.

2. The executing officers of the Insurance Surety Bond for Earnest Money/Bid Security shall clearly indicate in (block letters) his name, designation, Power of Attorney No. / Signing Power No. as well as telephone/ fax numbers with full correspondence address of the issuing Guarantee etc.

3. Each page of the Insurance Surety Bond for Earnest Money Deposit shall be duly signed/initialed by the executing officers and the last page shall be signed in full, indicating the particulars as aforesaid (sub-para 2) under the seal of the Insurance Company.

4. Stamp paper shall be purchased in the name of Insurance Company issuing the

Insurance Surety Bond, after the date 'Notice Inviting Tender', not more than six (6) months prior to execution/ issuance of the Insurance Surety Bond. The name of the purchaser should appear at the back side of stamp paper in the Vendors Stamp. The issuing Insurance Company shall be requested independently for verification/confirmation of the Insurance Surety Bond issued, non-confirmation of which may lead to rejection of 'Insurance Surety Bond'.

6. Irrevocable, valid and fully enforceable Insurance Surety Bond in favor of the Employer (Name of Employer) issued by any Insurance Company registered under Insurance Act 1938 or as amended from time to time and approved by the Insurance Regulatory Development Authority of India (IRDAI) in Indian currency (INR) only is acceptable to the Employer.

6. Insurance Surety Bond for Bid security in original shall be submitted along with the Bid. However, the issuing Insurance Company shall submit an unstamped duplicate copy of Insurance Surety Bond directly by registered post (A.D.) to the Employer (authority inviting tenders) with a forwarding letter.

FORM-4

BANK GURANTEE FORMAT FOR PERFORMANCE SECURITY

(To be executed on Non-Judicial Stamp Paper of Appropriate value)

Bank Guarantee No.....

Date.....

To,
NHPC Limited,
Sector 33, Faridabad, Haryana

Dear Sirs,

In consideration of the ... *[Employer's Name]* (hereinafter referred to as the 'Employer' which expression shall unless repugnant to the context or meaning thereof, include its successors, administrators and assigns) having awarded to M/s *[Contractor's Name]*..... with its Registered/Head Office at.....(hereinafter referred to as the 'Contractor', which expression shall unless repugnant to the context or meaning thereof, include its successors, administrators, executors and assigns), a Contract by issue of Employer's Letter of Acceptance No..... dated..... and the same having been acknowledged by the contractor, for ----------[Contract sum in figures and words] for ……*[Name of the work]* and the Contractor having agreed to provide a Contract Performance Guarantee for the faithful performance of the entire Contract equivalent to .....(*). of the said value of the aforesaid work under the Contract to the Employer.

We .....*[Name & Address of the Bank]*.....having its Head Office at.....(hereinafter referred to as the 'Bank', which expression shall, unless repugnant to the context or meaning thereof, include its successors, administrators, executors and assigns) do hereby guarantee and undertake to pay the Employer, on demand any and all monies payable by the Contractor to the extent of .....(*) as aforesaid at any time upto .....(@). ..... *[days/month/year]* without any demur, reservation, contest, recourse or protest and/or without any reference to the Contractor. Any such demand made by the Employer on the Bank shall be conclusive and binding notwithstanding any difference between the Employer and the Contractor or any dispute pending before any Court, Tribunal, Arbitrator or any other authority. The Bank undertakes not to revoke this guarantee during its currency without previous consent of the Employer and further agrees that the guarantees herein contained shall continue to be enforceable till the Employer discharges this guarantee or till ……(+)…….. *[days/month/year]* whichever is earlier.

The Employer shall have the fullest liberty, without affecting in any way the liability of

the Bank under this guarantee, from time to time to extend the time for performance of the Contract by the Contractor. The Employer shall have the fullest liberty, without affecting this guarantee, to postpone from time to time the exercise of any powers vested in them or of any right which they might have against the Contractor, and to exercise the same at any time in any manner, and either to enforce or to forbear to enforce any covenants, contained or implied, in the Contract between the Employer and the Contractor or any other course or remedy or security available to the Employer. The Bank shall not be released of its obligations under these presents by any exercise by the Employer of its liberty with reference to the matters aforesaid or any of them or by reason of any other act or forbearance or other acts of omission or commission on the part of the Employer or any other indulgence shown by the Employer or by any other matter or thing whatsoever which under the law would, but for this provision have the effect of relieving the Bank.

The Bank declares that this Bank Guarantee is issued by the Bank, utilizing the credit limit of M/s .....(name of contractor) and also agrees that the Employer at its option shall be entitled to enforce this Guarantee against the Bank as a principal debtor, in the first instance without proceeding against the Contractor and notwithstanding any security or other guarantee the Employer may have in relation to the Contractor's liabilities.

i) Our liability under this Bank Guarantee shall not exceed _____(*)_____.

ii) This Bank Guarantee shall be valid upto_____(+)_____.

iii) We are liable to pay the guaranteed amount or any part thereof under this Bank Guarantee only and only if Employer serves upon Bank a written claim or demand on or before_____(@)_____

Dated this .....day of .....20_.....at.....

WITNESS..... (Signature).....

(Signature)

.....

(Name) (Name).....

....

(Official Address) (Designation with Bank Stamp)/with staff Authority no.

Complete Address of the Bank with Tele-Fax

Notes: 1. (*) This sum shall be two percent (2%) of the Contract Price denominated in the types and proportions of currencies.

(@) This date will be Ninety (90) days beyond the issue of Defects liability Certificate as specified in the Contract.

(+) This date will be the date of issue of Defects Liability Certificate.

2. Bank Guarantee should be executed on appropriate stamp paper of requisite value, such stamp paper should be purchased in the name of Issuing Bank, not more than six (6) months prior to execution / issuance of Bank Guarantee. The name of the purchaser should appear at the back side of stamp paper in the Vendors Stamp. Bank guarantee should contain rubber stamp of the authorized signatory of the bank indicating the name, designation and signature/ power of attorney number as well as telephone/ fax numbers with full correspondence address of the Bank.

   In case the same is issued by a first class International Bank, the law prevalent in the country of execution shall prevail for the purpose of Stamp Duty on the Bank Guarantee. However, in such a case, the bank Guarantee shall be got confirmed through any Indian Scheduled/Nationalized Bank.

3. Bank Guarantee is required to be submitted directly to the Employer by the issuing bank (on behalf of Contractor) under registered post (A.D.). The Contractor can submit an advance copy of Bank Guarantee to the Engineer.

4. The issuing bank shall write the name of bank's controlling branch/ Head Office along with contact details like telephone/ fax and full correspondence address in order to get the confirmation of BG from that branch/ Head office, if so required.

FORM-5

FORMAT OF INSURANCE SURETY BOND FOR PERFORMANCE SECURITY

(To be executed on Non-Judicial Stamp Paper of Appropriate value)

Insurance Surety Bond No.....

Date.....

To,

[Employer's Name & Address]

Dear Sirs,

In consideration of the ... *[Employer's Name]* (hereinafter referred to as the 'Employer' which expression shall unless repugnant to the context or meaning thereof, include its successors, administrators and assigns) having awarded to M/s *[Contractor's Name]*..... with its Registered/Head Office at.....(hereinafter referred to as the 'Contractor', which expression shall unless repugnant to the context or meaning thereof, include its successors, administrators, executors and assigns), a Contract by issue of Employer's Letter of Acceptance No..... dated..... and the same having been acknowledged by the contractor, for ----------[Contract sum in figures and words] for ……*[Name of the work]* and the Contractor having agreed to provide a Contract Performance Guarantee for the faithful performance of the entire Contract equivalent to .....(*). of the said value of the aforesaid work under the Contract to the Employer.

We .....*[Name & Address of the Insurance Company]*.....having its Head Office at.....(hereinafter referred to as the 'Surety, which expression shall, unless repugnant to the context or meaning thereof, include its successors, administrators, executors and assigns) do hereby guarantee and undertake to pay the Employer, on demand any and all monies payable by the Contractor to the extent of .....(*) as aforesaid at any time upto .....(@). *[days/month/year]* without any demur, reservation, contest, recourse or protest and/or without any reference to the Contractor. Any such demand made by

the Employer on the Insurance Company shall be conclusive and binding notwithstanding any difference between the Employer and the Contractor or any dispute pending before any Court, Tribunal, Arbitrator or any other authority. The Surety undertakes not to revoke this guarantee during its currency without previous consent of the Employer and further agrees that the guarantees herein contained shall continue to be enforceable till the Employer discharges this guarantee or till ……(+)… *[days/month/year]* whichever is earlier.

The Employer shall have the fullest liberty, without affecting in any way the liability of the Insurance Company under this guarantee, from time to time to extend the time for performance of the Contract by the Contractor. The Employer shall have the fullest liberty, without affecting this guarantee, to postpone from time to time the exercise of any powers vested in them or of any right which they might have against the Contractor, and to exercise the same at any time in any manner, and either to enforce or to forbear to enforce any covenants, contained or implied, in the Contract between the Employer and the Contractor or any other course or remedy or security available to the Employer. The Insurance Company shall not be released of its obligations under these presents by any exercise by the Employer of its liberty with reference to the matters aforesaid or any of them or by reason of any other act or forbearance or other acts of omission or commission on the part of the Employer or any other indulgence shown by the Employer or by any other matter or thing whatsoever which under the law would, but for this provision have the effect of relieving the Insurance Company.

The Surety declares that this Insurance Surety Bond is issued by the .....(Name of Insurance Company)as per the applicable rules and regulations of Insurance Regulatory Development Authority of India (IRDAI) and also agrees that the Employer at its option shall be entitled to enforce this Guarantee against the Insurance Company as a principal debtor, in the first instance without proceeding against the Contractor and notwithstanding any security or other guarantee the Employer may have in relation to the Contractor's liabilities.

i) Our liability under this Insurance Surety Bond shall not exceed__(*)____.

iii) This Insurance Surety Bond shall be valid upto____(+)_____.

iii) We are liable to pay the guaranteed amount or any part thereof under this Insurance Surety Bond only and only if Employer serves upon Surety a written claim or demand on or before_____(@)_____

Dated this .....day of .....20_.....at.....

WITNESS

..... (Signature).....

(Signature)

.....

(Name) (Name).....

....

(Official Address) (Designation with Stamp of Insuranc e Company)/with staff Authority no.

Complete Address of the Insurance Company with Telephone No. and e-Mail Id.

Notes: 1. (*) This sum shall be two percent (2%) of the Contract Price denominated in the Indian currency.

(@) This date will be Ninety (90) days beyond the issue of Defects liability Certificate as specified in the Contract.

(+) This date will be the date of issue of Defects Liability Certificate.

2. Insurance Surety Bond should be executed on appropriate stamp paper of requisite value, such stamp paper should be purchased in the name of Issuing Insurance Company, not more than six (6) months prior to execution / issuance of Insurance Surety Bond. The name of the purchaser should appear at the back side of stamp paper in the Vendors Stamp. Insurance Surety Bond should contain rubber stamp of the authorized signatory of the Insurance Company

indicating the name, designation and signature/ power of attorney number as well as telephone numbers / e-Mail Id with full correspondence address of the Insurance Company.

In case the same is issued by an International Insurance Company (it should be registered under Insurance Act 1938 or as amended from time to time and approved by the Insurance Regulatory Development Authority of India (IRDAI)), the law prevalent in the country of execution shall prevail for the purpose of Stamp Duty on the Insurance Surety Bond. However, in such a case, the Insurance Surety Bond shall be got confirmed through any Indian Scheduled/Nationalized Insurance Company.

5. Insurance Surety Bond is required to be submitted directly to the Employer by the issuing Insurance Company (on behalf of Contractor) under registered post (A.D.). The Contractor can submit an advance copy of Insurance Surety Bond to the Engineer.

6. The issuing Insurance Company shall write the name of Insurance Company's controlling branch/ Head Office along with contact details like telephone no., e-Mail Id and full correspondence address in order to get the confirmation of Insurance Surety Bond from that branch/ Head office, if so required.

~~FORM-6~~

~~BANK GUARANTEE FORMAT FOR ADVANCE PAYMENT~~

~~(To be executed on Non-Judicial Stamp Paper of Appropriate value)~~

~~Bank Guarantee No.....~~

~~Date.....~~

~~To,~~

~~*[Employer's Name & Address]*~~

~~Dear Sir,~~

~~In consideration of the [*Employer's Name]*.... (hereinafter referred to as the 'Employer', which expression shall, unless repugnant to the context or meaning thereof include its successors, administrators and assigns) having awarded to M/s *[Contractor's Name]*..... with its Registered/Head Office at.....(hereinafter referred to as the 'Contractor' which expression shall unless repugnant to the context or meaning thereof, include its successors, administrators, executors and assigns), a Contract, by issue of Employer's Letter of Acceptance No. ..... dated ..... and the same having been acknowledged by the Contractor, resulting into a Contract bearing No. .....dated.....valued at..... ……for .....*[Name of Contract*] .....(hereinafter called the 'Contract') and the Employer having agreed to make an advance payment to the Contractor for performance of the above Contract amounting ..... (in words and figures) as an Advance against Bank Guarantee to be furnished by the Contractor.~~

~~We.....*[Name and address of the Bank]*..... having its Head Office at ..... (hereinafter referred to as the 'Bank', which expression shall, unless repugnant to the context or meaning thereof, include its successors, administrators, executors and assigns) do hereby guarantee and undertake to pay the Employer, immediately on demand any or, all monies payable by the Contractor to the extent of .....*[advance amount]*..... as aforesaid at any time upto .....(@)..... without any demur, reservation, contest, recourse or protest and/ or without any reference to the Contractor. Any such demand made by the Employer on the Bank shall be conclusive and binding notwithstanding any difference between the Employer and the Contractor or any dispute pending before any Court, Tribunal, Arbitrator or any other authority. We agree that the~~

~~guarantee herein contained shall be irrevocable and shall continue to be enforceable till the Employer discharges this guarantee.~~

~~The Employer shall have the fullest liberty without affecting in any way the liability of the Bank under this guarantee, from time to time to vary the advance or to extend the time for performance of the Contract by the Contractor. The Employer shall have the fullest liberty without affecting this guarantee, to postpone from time to time the exercise of any powers vested in them or of any right which they might have against the Contractor, and to exercise the same at any time in any manner, and either to enforce or to forbear to enforce any covenants, contained or implied, in the Contract between the Employer and the Contractor or any other course or remedy or security available to the Employer. The Bank shall not be released of its obligations under these presents by any exercise by the Employer of its liberty with reference to the matters aforesaid or any of them or by reason of any other act or forbearance or other acts of omission or commission on the part of the Employer or any other indulgence shown by the Employer or by any other matter or thing whatsoever which under law would but for this provision have the effect of relieving the Bank.~~

~~The Bank declares that this Bank Guarantee is issued by the Bank, utilizing the credit limit of M/s .....(name of contractor) and also agrees that the Employer at its option shall be entitled to enforce this Guarantee against the Bank as a principal debtor, in the first instance without proceeding against the Contractor and notwithstanding any security or other guarantee that the Employer may have in relation to the Contractor's liabilities.~~

~~Notwithstanding anything contained herein:~~

~~i) Our liability under this Bank Guarantee shall not exceed._____.~~

~~ii) This Bank Guarantee shall be valid upto_____.~~

~~iii) We are liable to pay the guaranteed amount or any part thereof under this Bank Guarantee only and only if Employer serve upon Bank a written claim or demand on or before_____(@)_~~

~~Dated this .....day of ..... at ..... .~~

~~WITNESS~~

~~..... (Signature).....~~

~~(Signature)~~

~~.....~~

~~(Name) (Name).....~~

~~..... .....~~

~~(Official Address)~~

~~(Designation with Bank Stamp)/Staff Authority No.~~

~~Complete Address of the Bank with Tele-Fax~~

~~Dated.....~~

~~**Notes:**1. (@) This date shall be ninety (90) days beyond the date of Completion of the Works.~~

~~2. Bank Guarantee should be executed on appropriate stamp paper of requisite value, such stamp paper should be purchased in the name of Issuing Bank, not more than six (6) months prior to execution / issuance of Bank Guarantee. The name of the purchaser should appear at the back side of stamp paper in the Vendors Stamp. Bank guarantee should contain rubber stamp of the authorized signatory of the bank indicating the name, designation and signature/ power of attorney number as well as telephone/ fax numbers with full correspondence address of the Bank.~~

~~In case the same is issued by a first class International Bank, the law prevalent in the country of execution shall prevail for the purpose of Stamp Duty on the Bank Guarantee. However, in such a case, the bank Guarantee shall be got confirmed through any Indian Scheduled/Nationalized Bank.~~

~~3. Bank Guarantee is required to be submitted directly to the Employer by the issuing bank (on behalf of Contractor) under registered post (A.D.). The Contractor can submit an advance copy of Bank Guarantee to the Engineer.~~

~~4. The issuing bank shall write the name of bank's controlling branch/ Head Office along with contact details like telephone/ fax and full correspondence address in order to get the confirmation of BG from that branch/ Head office, if so required.~~

FORM-7

BANK GUARANTEE FORM FOR RELEASE / PAYMENT OF RETENTION MONEY

(To be executed on Non-Judicial Stamp Paper of Appropriate value)

Bank Guarantee No.....

Date.....

To,

[Employer's Name & Address]

1. We.....*[Name and address of the Bank]* ..... having our Registered/Head Office at ..... (hereinafter referred to as the 'Bank', which expression shall, unless repugnant to the context or meaning thereof, include its successors, administrators, executors and assigns) do hereby undertake and agree to indemnify and keep indemnified the……*[Employer's Name]* ……..... (hereinafter referred to as "the Employer " which expression shall, unless repugnant to the subject or context, include its administrators, successors and assigns), to the extent of .....*[amount]*..... on behalf of M/s.....*[Contractor's Name]*..... with its Registered/Head Office at ..... (hereinafter referred to as "the Contractor) in lieu of an equal cash amount of Retention Money deposited by the Contractor and/or deducted by the Employer from the bills of the Contractor and which the Employer has agreed to substitute with a bank guarantee as hereunder, under the provisions of Contract No.....dt. ….....which the Contractor has entered into with the Employer in connection with the construction of.....…. (*Name of Work*) at a total cost of (*Contract Sum*) (hereinafter called the ` Contract').
2. We, the Bank also do hereby agree to pay unequivocally and unconditionally immediately on demand, in writing, from the Employer, of any amount upto and not exceeding .....*[amount]*..... to the Employer for any purpose or cause or on any account whatsoever under the provisions of the Contract in which respect the decision of the Employer shall be final and binding on us.

3. We, the Bank, further agree that this guarantee shall be valid and binding on us upto and including .....(@).....and shall not be terminable by notice or any change in the constitution of the said Bank or the Contractor or by any other reasons whatsoever and our liability hereunder shall not be impaired or discharged by any extension of time or

variations made, given conceded, or agreed with or without our knowledge or consent, by or between the parties to the Contract.

4. We also undertake not to revoke this guarantee during its currency except with the previous consent, in writing, of the Employer.

5. Our liability under this guarantee is restricted to ……..... *[amount]*. Our guarantee shall remain in force until .....(@) .....

6. The Bank declares that this Bank Guarantee is issued by the Bank, utilizing the credit limit of M/s (name of contractor) and also agrees that the Employer at its option shall
be entitled to enforce this Guarantee against the Bank as a principal debtor, in the first instance without proceeding against the Contractor and notwithstanding any security or other guarantee the Employer may have in relation to the Contractor's liabilities

In the presence of

Witness For and on behalf of the Bank with Staff Authority No.

..... Bank's common seal with complete address including Tel./fax. Nos.

Dated this.....day of..... 20

Notes:

1. (@) This date will be Ninety (90) days beyond the issue of Defects liability Certificate as specified in the Contract.

2. Bank Guarantee should be executed on appropriate stamp paper of requisite value, such stamp paper should be purchased in the name of Issuing Bank, not more than six
(6) months prior to execution / issuance of Bank Guarantee. The name of the purchaser should appear at the back side of stamp paper in the Vendors Stamp. Bank guarantee should contain rubber stamp of the authorized signatory of the bank
indicating the name, designation and signature/ power of attorney number as well as telephone/ fax numbers with full correspondence address of the Bank.

In case the same is issued by a first class International Bank, the law prevalent in the country of execution shall prevail for the purpose of Stamp Duty on the Bank Guarantee. However, in such a case, the bank Guarantee shall be got

confirmed through any Indian Scheduled/Nationalized Bank.

3. Bank Guarantee is required to be submitted directly to the Engineer by the issuing bank (on behalf of Contractor) under registered post (A.D.). The Contractor can submit an advance copy of Bank Guarantee to the Engineer.

4. The issuing bank shall write the name of bank's controlling branch/ Head Office along with contact details like telephone/ fax and full correspondence address in order to get the confirmation of BG from that branch/ Head office, if so required.

FORM-8 ECS

N.H.P.C. Limited.

ELECTRONIC CLEARING SERVICE (CREDIT CLEARING) (PAYMENT TO PARTIES THROUGH CREDIT CLEARING MECHANISM)

No. :

1. BIDDER'S NAME : _____

Address : _____

_____

Phone/Mobile No. : _____

2. PERTICULARS OF BANK ACCOUNT : _____

A. BANK NAME : _____

B. BRANCH NAME

Address : _____

Telephone No. : _____

C. IFSC code of the Bank : | | | | | | | | | | | | |

(For payments through RTGS)

D. ACCOUNT TYPE : | | |

(S.B. Account/Current Account or Cash Credit with Code 10/11/13)

E. ACCOUNT NUMBER : _____

(As appearing on the Cheque Book)

I hereby declared that the particulars given above are correct and complete. If the transaction is delayed or not effected at all for reasons of incomplete or incorrect information, I would not hold the user Company responsible.

Date: (.....)

Signature of the

Bidder Certified that the particulars furnished above are correct as per our records.

(Bank's Stamp) (……)

Signature of the Authorised Official

from the Bank

Date:

~~FORM-9~~

~~INDENTURE FOR SECURED ADVANCES~~

~~(To be executed on Non-Judicial Stamp Paper of Appropriate value)~~

~~Division …… Sub – division ……..~~

~~THIS INDENTURE made the …….. BETWEEN M/s …….. (hereinafter called the contractor, which expression shall where context so admits or implies be deemed to include his executors, administrators and assigns) of the one part and the NHPC Ltd. (hereinafter called the Corporation which expression shall where the context so admits or implies be deemed to include its successors in office and assigns) of the other part.~~

~~WHEREAS by an agreement no…… dated……(hereinafter called the said agreement) the Contractor has agreed.~~

~~AND WHEREAS the Contractor has applied to the Corporation that he may be allowed advances on the security of materials absolutely belonging to him and brought by him to the site of the works the subject of the said agreement for use in the constructions of such of the works as he has undertaken to execute at rates fixed for the finished work (inclusive of the cost of materials and labour and other charges) AND WHEREAS the Corporation has agreed to advance to the Contractor the sum of Rupees …… on the security of material, the quantities and other particulars of which are detailed in part II of the Running Account Bill (B) for the said works signed by the Contractor on and the Corporation has reserved to itself the option of making any further advance or advances on the security of other materials brought by the Contractor to the site of the said works.~~

~~NOW THIS INDENTURE WITNESSETH that in pursuance of the said agreement and in consideration of the sum of Rupees …….. on or before the execution of these presents paid to the Contractor by the Corporation (the receipt whereof the Contractor doth hereby acknowledge) and of such further advances (if any) as may be made to him as aforesaid the Contractor doth hereby covenant and agree with the Corporation and declare as follows:~~

~~(1) That the said sum of Rupees …….. so advanced by Corporation to the Contractor as aforesaid and all or any further sum or sums advanced as aforesaid shall be employed by the Contractor in or towards expediting the execution of the said works and for no other purpose whatsoever.~~

~~(2) That the materials detailed in the said Running Account Bill (B) which have been offered to and accepted by the Corporation as security are absolutely the Contractor's own property and free from encumbrances of any kind and the Contractor will not make any application for or receive a further advance on the security of materials which are not absolutely his own property and free from encumbrances of any kind and the Contractor indemnifies the Corporation against all claims to any materials in respect of which an advance has been made to him as aforesaid.~~

~~(3) That the materials detail in the said Running Account Bill (B) and all other materials on the security of which any further advance or advances may hereafter be made as aforesaid (hereinafter called the said materials) shall be used by the Contractor solely in the execution of the said works in accordance with the directions of the Engineer-in-charge and in the terms~~

~~of the said agreement.~~

~~(4) That the Contractor shall make at his own cost all necessary and adequate arrangements for the proper watch, safe-custody and protection against all risks or the said materials and that until used in construction as aforesaid said materials shall remain at the site of the said works in the Contractor's custody and on his own responsibility and shall at all times be open to inspection by the Engineer-in- charge In the event of the materials or any part thereof being stolen, destroyed or damaged or becoming deteriorated in a greater degree than is due to reasonable use and wear thereof the Contractor will forthwith replace the same with other materials of like quality or repair and make good the same as required by the Engineer-in-charge.~~

~~(5) That the said materials shall not on any account be removed from the site of the works except with the written permission of the Engineer-in-charge .~~

~~(6) That the advance shall be repayable in full when or before Contractor receives payment from the Corporation of the Price payable to him for the said works under the terms and provisions of the said agreement. Provided that if any intermediate payment are made to the Contractor on account of work done then on the occasion of each such payment the Corporation will be at liberty to make a recovery from the Contractor's bill for such payment by deducting there from the value of the said materials than actually used in the construction and in respect of which recovery has not been made previously the value for this purpose being determined in respect of each description of materials at the rates at which the amounts of the advances made under these presents were calculated.~~

~~(7) That if the Contractor shall at any time make any default in the performance or observance in any respect of any of the terms and provisions of the said agreement or of these presents the total amount of the advance or advances that may still be owing to the Corporation shall immediately on the happening of such default be repayable by the Contractor to the Corporation together with interest thereon at twelve percent per annum from the date or respective dates of such advance or advances to the date of repayment and with all costs, charges, damages, and expenses incurred by the Corporation in or for the recovery thereof or the enforcement of this security or otherwise by reason of the default of the Contractor and the Contractor hereby covenants and agrees with the Corporation to repay and pay the same respective to him accordingly.~~

~~(8) That the Contractor hereby charges all the said materials with the repayments to the Corporation of the said sum of Rs……and any further sum or sums advanced as aforesaid and~~
~~all costs, charges, damages and expenses payable under there presents PROVIDED ALWAYS and it is hereby agreed and declared that not withstanding anything in the said agreement and without prejudice to the powers contained therein if and whenever the convenant for payment and repayment herein before contained shall become enforceable and the money owing shall not be paid in accordance there with the Corporation may at any time thereafter adopt all or any of the following courses as he may deem best:~~

> ~~(a) Seize and utilize the said materials or any part thereof in the completion of the said works on behalf of the Contractor in accordance with the provisions in that behalf contained in the said agreement debiting the contractor with the actual cost of effecting such completion and the amount due in respect of advances under these presents and crediting the Contractor with the value of work done as if he had carried it out in accordance with the said agreement and at the rates thereby provided. If the balance is against the Contractor he is to pay the same to the Corporation on demand.~~

~~(b) Remove and sell by public auction the seized materials or any part thereof and out of the moneys arising from the sale retain all the sums aforesaid repayable or payable to the Corporation under these presents and pay over the surplus (if any) to the Contractor.~~

~~(c) Deduct all or any part of the moneys owing out of the security deposit or any sum due to the Contractor under the said agreement.~~

~~(9) That except in the event of the such default on the part of the Contractor as aforesaid interest on the said advance shall not be payable.~~

~~(10) That in the event of any conflict between the provisions of these presents and the said agreement the provisions of these presents shall prevail and in the event of any dispute or difference arising over the construction or effect of these presents the settlement of which has not~~

~~been hereinbefore expressly provided for the same shall be referred to the Engineer-in-charge whose decision shall be final and the provision of the Indian Contract Act for the time being in force shall apply to any such reference. IN WITNESS whereof the said ..... and ……by the order under the direction of the Corporation have hereunto set their respective hands the day and year first above written.~~

~~Signed, sealed and delivered by……~~

~~The said Contractor~~

~~in the presence of ---~~

~~Signature ……~~

~~Witness Name ……~~

~~Address ……~~

~~Signed by ……~~

~~by the order and direction of the NHPC Limited in the presence of –~~

~~Signature ……~~

~~Witness Name ……~~

~~Address ……~~

एनएचपीसी लिमिटेड

(भारत सरकार का एक नवरत्न उद्यम)

NHPC Limited

(A Government of India Navratna Enterprise)

खण्ड-6

संविदा की विशेष शर्तें (SCC)

SECTION-VI

SPECIAL CONDITIONS OF CONTRACT (SCC)

SECTION-VI

संविदा की विशेष शर्तें /SPECIAL CONDITIONS OF CONTRACT (SCC)

विषय : सलाल पावर स्टेशन के बांध और पावर हाउस तक पहुँचने वाली सड़कों की मरम्मत ।
Sub: Repair of damaged at TRT area during monsoon 2025 at Salal Power Station

The following special conditions shall be read in conjunction with the corresponding relevant provisions made in the General Conditions of Contract and in case of any discrepancy or variation or contradiction between them, the provisions made under these Special Conditions of Contract, shall prevail:

1. The contractor shall comply with the provisions of all Acts/ Laws and regulations as per clause No.29 and 34 of General conditions of N.H.P.C. contract for Civil works such as payment of wages Act/minimum wages Act/workmen compensation Act/Personnel Injuries (compensation Insurance Act) etc. and any modification thereof and rules made there-under from time to time, the contractor shall obtain the Insurance of labourers etc. to be deployed on work as per clause No.34. The contractor shall take into account all the above said financial liabilities and nothing extra whatsoever shall be payable to him on this account. Failure of complying with above Acts/Laws/Regulations etc. shall be responsibility of the contractor. The contractor is bound to take all liabilities and responsibility on account of any Labour accident, electrical shock etc. and department is nowhere responsible for such sort of faults.
2. The contractor shall follow & act all the statutory provisions.
3. All the precautions related to the safety of man, material and equipment shall be ensured by the contractor at work place and provide any kind of medical aid to the workmen at site.
4. The contractor shall obtain the labour insurance for the stipulated execution period and extension period further occurred if any.
5. Contractor shall provide Personal Protective Equipments as per ISO-14001 guidelines and make safety arrangements for the personnel and equipment on the work as per the safety manual of the Corporation and comply all the laws implied time to time.
6. The contractor shall make payment to his workers deployed by him on the work before releasing running/ final bill. The contractor is to pay not less than the rate of minimum

wages notified by J&K Govt/ Central Government as per provision of the minimum wages act whichever is applicable, failing which department will be free to pay the wages directly to the workmen without any consent of the contractor or without any obligation thereof. The amount paid for such wages shall be recovered from the bills of the contractor.

7. CGST @ 1%, SGST @ 1%, Cess @ 1% if applicable will be deducted from the bill which will be borne by the contractor without any extra burden to NHPC.
8. The deposition of GST paid through the running/ final bill is the sole responsibility of the contractor without any extra burden to NHPC
9. All arrangements in the shape of T&P items as required for executing the said work should be arranged by the contractor.
10. The contractor shall deploy the labour as per requirement of work and direction of Engineer-in-charge.
11. Contractor and his representative shall follow the instructions of Engineer-in-charge and work shall be executed as per instruction and entire satisfaction of Engineer-in-charge.
12. The BOQ shall not be used as basis for ascertaining the materials to be ordered. The contractor shall use his own recourses to access the quantities of materials to be ordered and shall be directly responsible for the same.
13. In case any material/work is found substandard it shall be rejected by the Engineer. The contractor shall remove the same from the site within 24 hours.
14. **Engineer-in-Charge/Engineer:** Dy. General Manager (Civil), Dam Complex.
15. **Paying Authority** – Dy. General Manager/HOD (Finance), Salal Power Station.

16. **SECURITY DEPOSIT FOR PERFORMANCE:**

16.1 The Security Deposit shall comprise of following

i) Performance Security Deposit to be furnished by the Contractor at the time of Award of Work.

(ii) Retention Money to be recovered from Running Account bills of the Contractor.

16.2 **The Contractor within 28 (twenty-eight) days from the date of issue of Letter of Acceptance, shall furnish a Performance security deposit of 2% (two percent) of the Contract Price including additional Security Deposit for abnormally low rated bid for due performance of contract, in any one of the following forms:**

(a) Demand draft on any Nationalised/scheduled Bank of India in the name of Employer; or

(b) Bank Guarantee issued / confirmed from an Indian Nationalised/Scheduled Bank of India acceptable to Employer in the prescribed Proforma.

(c) Insurance Surety Bond issued / confirmed by Insurance Company registered in India under Insurance Act 1938 or as amended from time to time and approved by the Insurance Regulatory Development Authority of India (IRDAI) acceptable to Employer in the prescribed proforma.

If the contractor does not submit the performance security within the stipulated period due to any valid reason, Tender Inviting Authority may grant time extension for submission of performance security based on the request of contractor.

In case, the contractor does not submit performance security without a valid reason, the Employer shall impose simple interest @12% per annum on the full amount of applicable performance security (alongwith applicable taxes, if any) for the period of delay in submission of performance security. The interest on delayed period shall be calculated on pro rata basis for number of delayed days.

The interest accrued shall be payable by the Contractor within 14 days from the date of intimation by Tender Inviting Authority in form of Bank Demand Draft/ Banker Cheque in favour of 'NHPC Ltd', otherwise the same shall be recovered from any payment due or become due against bills / any other amount lying with NHPC.

The delayed submission of Performance Security by the Contractor shall be recorded in substantial completion and final completion certificates. Further, no claim for extension of time for completion period or any other type of claim on account of delayed submission of performance security shall be entertained.

If contractor fails to submit the Performance Security within 45 days (for the contracts having time for completion - upto 12 months) or 60-days (for the contracts having time for completion - more than 12 months) from the date of issue of Letter of Award (LOA), then following actions shall be taken against such Contractor:

i) The bidder shall be debarred / banned to participate in the business dealings with NHPC for a period of one year.
ii) The name of the Contractor shall be hosted on the NHPC website etc. as per existing norms of NHPC / Govt. of India.
iii) Such defaulted contractor shall not be eligible to participate in the bidding process of re-tender of this work.

16.3 **Retention money shall be deducted by the Engineer-in-Charge from the interim bills of the Contractor @ 3% (three percent) of the total value of each bill of the work done (including those of price variation) towards Security Deposit**.

16.4 If the Contractor expressly requests in writing, he will be permitted to convert the amount of Retention Money deducted from his interim bills into Bank Guarantee as per prescribed proforma.

16.5 All compensation or other sums of money payable by the Contractor to the Employer under the terms of this Contract or any other contract or on any other account whatsoever may be deducted from Security Deposit. Also in the event of the contractor's Security Deposit being reduced by reasons of such deductions, as aforesaid, the Contractor shall, within 14 days of receipt of notice of demand from the Engineer-in-Charge, make good the deficit in Security Deposit.

16.6 Should there arise any occasion under the Contract due to which the periods of validities of Bank Guarantees / Insurance Surety Bond as may have been furnished by the Contractor from time to time, are required to be extended/renewed, the Contractor shall get the validity periods of such guarantees or bonds extended/renewed, and furnish these to the Engineer-in-Charge one month before the expiry date of the aforesaid Guarantees / Bonds originally furnished failing which the existing Bank Guarantees / Insurance Surety Bonds shall be invoked by the Engineer – in – charge. Also in case of any deficit in securities on any account as might occur or is noticed, the Contractor shall forthwith recoup/replace the same with acceptable Security Deposit.

16.7 Bank Guarantees / Insurance Surety Bonds as aforesaid shall be valid till 90 days beyond the date of issue of Defects Liability Certificate under the Contract (Clause 43). In case the bid of the successful Contractor is abnormally low rated bid in relation to the Employer's estimated rates for such items, the Employer may require the Contractor to submit additional performance security in the form as stated above, to a level sufficient to protect against financial loss in the event of default of the successful Contractor under the Contract. The amount of the increased performance security shall be decided at the sole discretion of the Employer, which shall be final, binding and conclusive on the Contractor. The Bank Guarantee / Insurance Surety Bond for the additional performance security shall be valid up to 90 days beyond the issue of Defects Liability Certificate for the work under the scope of the contract.-

17.0 REFUND OF SECURITY DEPOSIT:

17.1 The Security Deposit less any amount due shall, on demand, be returned to the contractor after 30 days issue of expiry of Defects Liability Period for Security Deposit as per Clause **16.1 of SCC. However, the Security Deposit shall not be released till Liquidated Damages, if any, is pending for recovery. Additional Security Deposit for abnormally low rated bid shall be refunded within 30 days of completion of works.** No interest on the amount of Security Deposit (including for the additional security for the abnormally low rated bid) shall be paid to the Contractor at the time of release of Security Deposit.

-sd/-

महा प्रबंधक) वि°(
प्रापण एवं संविदा विभाग

कार्य का दायरा - Scope of Work (SoW)

विषय : सलाल पावर स्टेशन के बांध और पावर हाउस तक पहुँचने वाली सड़कों की मरम्मत ।
Sub : Repair of damaged at TRT area during monsoon 2025 at Salal Power Station

Scope of work shall mainly include execution of following work at site-

1 Dismantling of old damaged parapet wall.
2 Drilling work in concrete.
3 RCC Column and beam 1:1.5:3
4 Half brick work in 1:4 mortar
5 12 mm cement plaster in 1:4 mortar.
6 PCC 1:1.5:3
7 Boulder filling in wire crate.

समान कार्य की परिभाषा / SIMILAR WORK DEFINITION:

Similar work means any type of civil construction / repair works.

sd/-

महा प्रबंधक) वि°(
प्रापण एवं संविदा विभाग

एनएचपीसी लिमिटेड

(भारत सरकार का एक नवरत्न उद्यम)

NHPC Limited

(A Government of India Navratna Enterprise)

खण्ड-7

मात्रा एवं मूल्यों की अनुसूची

SECTION-VII

SCHEDULE-A

SCHEDULE OF QUANTITIES AND PRICES

(BILL OF QUANTITIES)

SCHEDULE OF QUANTITIES AND PRICES (Schedule-A)

विषय : सलाल पावर स्टेशन के बांध और पावर हाउस तक पहुँचने वाली सड़कों की मरम्मत ।
Sub: Repair of damaged at TRT area during monsoon 2025 at Salal Power Station

SL.No	Description	UNIT	Qty	Rate (Including GST18%, Cess 1% and Carriage Charges) (in ₹)	Amount (in ₹)
1	Earth work in excavation by mechanical means (hydraulic excavator) in trenches for foundations, drains, pipes, cables etc. (not exceeding 1.5 m in width) and for shafts, wells, cesspits and the like not exceeding 10 sqm on plan, including dressing of sides and ramming of bottoms lift upto 1.5 m, including getting out excavated earth and disposal of surplus excavated earth as directed, within a lead of 50 metres: All kinds of soil.	Cum	402.85	265.58	106988.90
2	Dismantling old protection work including cutting of crates and stacking of stones.	Cum	195.00	411.89	80318.55
3	Providing & making Gabion structure with Mechanically Woven Double Twisted Hexagonal Shaped Wire mesh Gabion Boxes as per IS 16014:2012,MORTH Clause 2500, of required size, Mesh Type 10x12 (D=100 mm with tolerance of ± 2%) Zinc coated, Mesh wire diameter 3.0mm, mechanically edged/selvedged with partitions at every 1m interval and shall have minimum 10 numbers of openings per meter of mesh perpendicular to twist, tying with lacing wire of diameter 2.2mm, supplied @ 3% by weight of Gabion boxes, filled with boulders with least dimension of 200 mm, as per drawing, all complete as per direction of Engineer-in-charge.	Cum	840.00	3198.47	2686714.80
4	Less for stone to be recovered for existing damaged crate (80 % of Item no 2) = 156.0 Cum	Cum	-156.00	723.80	-112912.80
5	Dry stone pitching, 225mm thick, including cost of stones and preparation of surface. Nallah stone	Sqm	115.00	347.01	39906.15

6	Demolishing R.C.C. work manually/by mechanical means including stacking of steel bars and disposal of unserviceable material within 50 meters lead as per direction of Engineer-in-charge.	Cum	4.36	2602.42	11346.55
7	Drilling suitable holes in reinforced or plain cement concrete with power driven drill machine to a minimum depth of 100mm upto 200mm in RCC beams, lintels, columns and slabs to introduce steel bars for sunshades/balconies including fixing the steel bars in position using epoxy resin anchor grout of approved make but excluding the cost of reinforcement, all complete as per direction of Engineer-In-Charge. Upto and including 12mm dia.	Each	448.00	115.29	51649.92
8	Steel reinforcement for R.C.C. work including straightening, cutting, bending, placing in position and binding all complete upto plinth level Thermo-Mechanically Treated bars of grade Fe-500D or more.	Kg	3928.51	127.72	501749.30
9	Centering and shuttering including strutting, propping etc. and removal of form for: Columns, pillars, piers, abutments, posts and struts.	Sqm	56.00	767.80	42996.80
10	Centering and shuttering including strutting, propping etc. and removal of form for: Lintels, Beams,plinth beams,girders,bressumers,and cantilevers.	Sqm	100.02	597.19	59730.94
11	Centering and shuttering including strutting, propping etc. and removal of form for: Foundations, footings, bases of columns etc. for mass concrete.	Sqm	260.38	296.09	77095.91
12	Centering and shuttering including strutting, propping etc. and removal of form for: Suspended floors, roofs, landings, balconies and access platforms.	Sqm	39.46	742.62	29303.79
13	Reinforced cement concrete work in walls (any thickness) including attached pilasters, buttresses, plinth and string courses, fillets, columns, pillars, piers, abutments, posts and struts upto floor five level including curing but excluding cost of centering shuttering, finishing and reinforcement.1:1½:3 (1 cement : 1½ coarse sand : 3 graded stone aggregate 20 mm nominal size)	CUM	12.71	10306.42	130994.60

14	Reinforced cement concrete work in beams, suspended floors, roofs having slope upto 15°, landings, balconies, shelves, chajjas, lintels, bands, plain window sills, staircases and spiral stair cases upto five level including curing but excluding the cost of centring, shuttering, finishing and reinforcement with 1:1½:3 (1 cement : 1½ coarse sand : 3 graded stone aggregate 20 mm nominal size)	Cum	5.54	10747.05	59538.66
15	Half brick masonry with common burnt clay (non-modular) bricks of class designation 7.5 in foundations and plinth including curing in :Cement mortar 1:4 (1 cement : 4 coarse sand)	Sqm	310.80	1099.56	341743.25
16	12mm Cement plaster of mix: 1 : 4 (1 cement : 4 fine sand)	Sqm	753.48	293.45	221108.71
17	Finishing walls with acrylic smooth exterior paint of required shade on New work (Two or more coats applied @ 1.67 liter/10sqm over and including priming coat of exterior primer applied @ 2.20kg/10sqm)	Sqm	753.48	191.50	144291.42
18	Providing and laying in position cement concrete of specified grade including curing but excluding the cost of centring and shuttering. All work upto plinth level with: 1:1½:3 (1 cement :1½ coarse sand: 3 graded stone aggregate 20 mm nominal size)	Cum	113.12	8113.87	917840.97
				₹	5390406.42
					Say ₹ 53,90,406/-
	(Rupees Fifty three lakhs ninety thousand four hundred and six only)				

SOQ (Schedule-A) Through E bidding only in CPPP portal
(www. eprocure.gov.in/eprocure/app)

Signature of Contractor

Note:

SOQ (Schedule 'A') is provided along with the tender on to the website (www. eprocure.gov.in/eprocure/app) in BOQ_XXXXXX.xls format. Bidders are advised to download the same and upload it, after properly filled.

एनएचपीसी लिमिटेड

(भारत सरकार का एक नवरत्न उद्यम)

NHPC Limited

(A Government of India Navratna Enterprise)

SECTION-VIII

TECHNICAL SPECIFICATION AND SAFETY MANUAL

Safety manual is the part of tender document and can be seen in the P&C complex and with Engineer- in -charge after award of work. Further, I/We, hereby accept all Terms & Conditions of Safety Manual of NHPC Limited which is available in the Office of General Manager (E), Procurement & Contract Division, Salal Power Station, Jyotipuram, Reasi, UT of J&K.

एनएचपीसी लिमिटेड

(भारत सरकार का एक नवरत्न उद्यम)

NHPC Limited

(A Government of India Navratna Enterprise)

SECTION-IX

DRAWINGS

Repair of damaged at TRT area during monsoon 2025 at Salal Power Station.

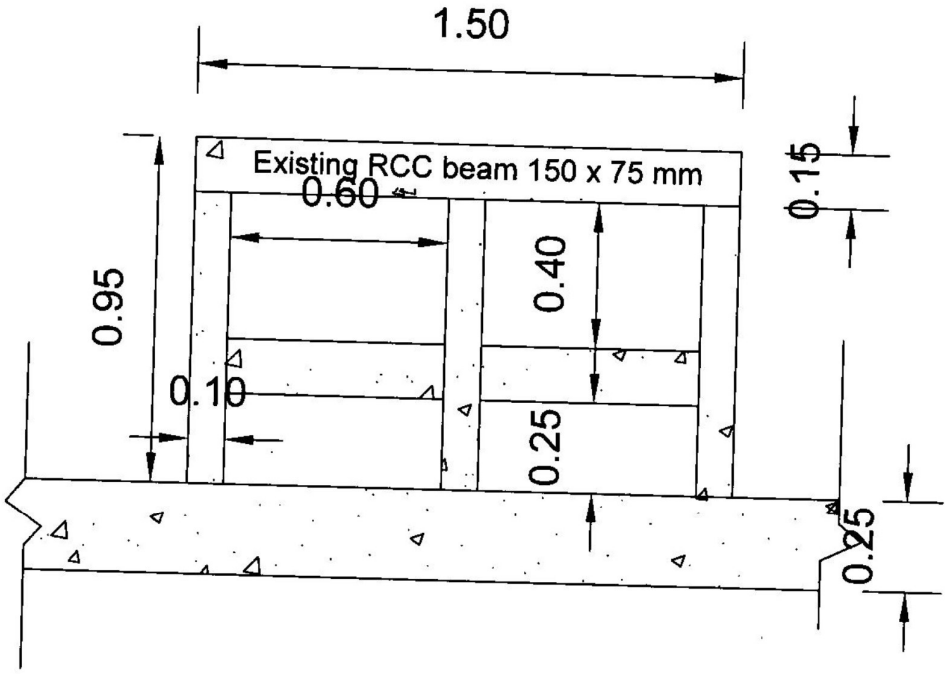

Existing 90 nos block
to be dismentled

Name of work :-Repair of damaged at TRT area during monsoon 2025
at Salal Power Station.

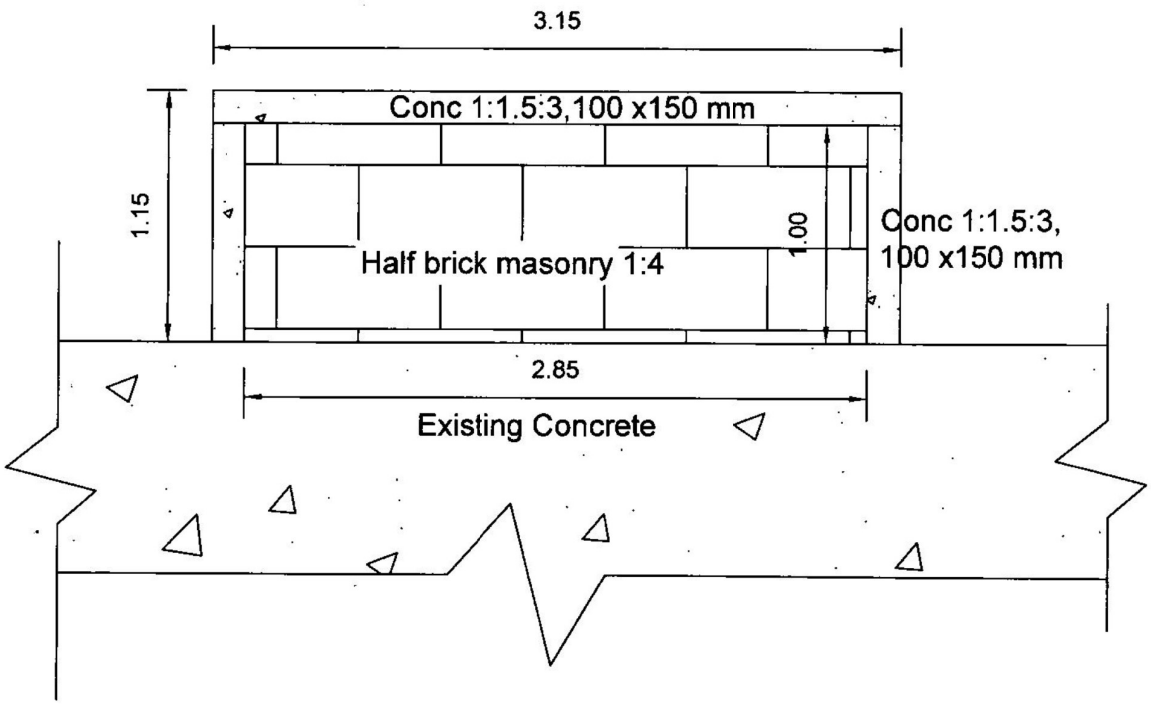

Proposed parapet wall

DMCC.

Repair of damaged at TRT area during monsoon 2025 at Salal Power Station.

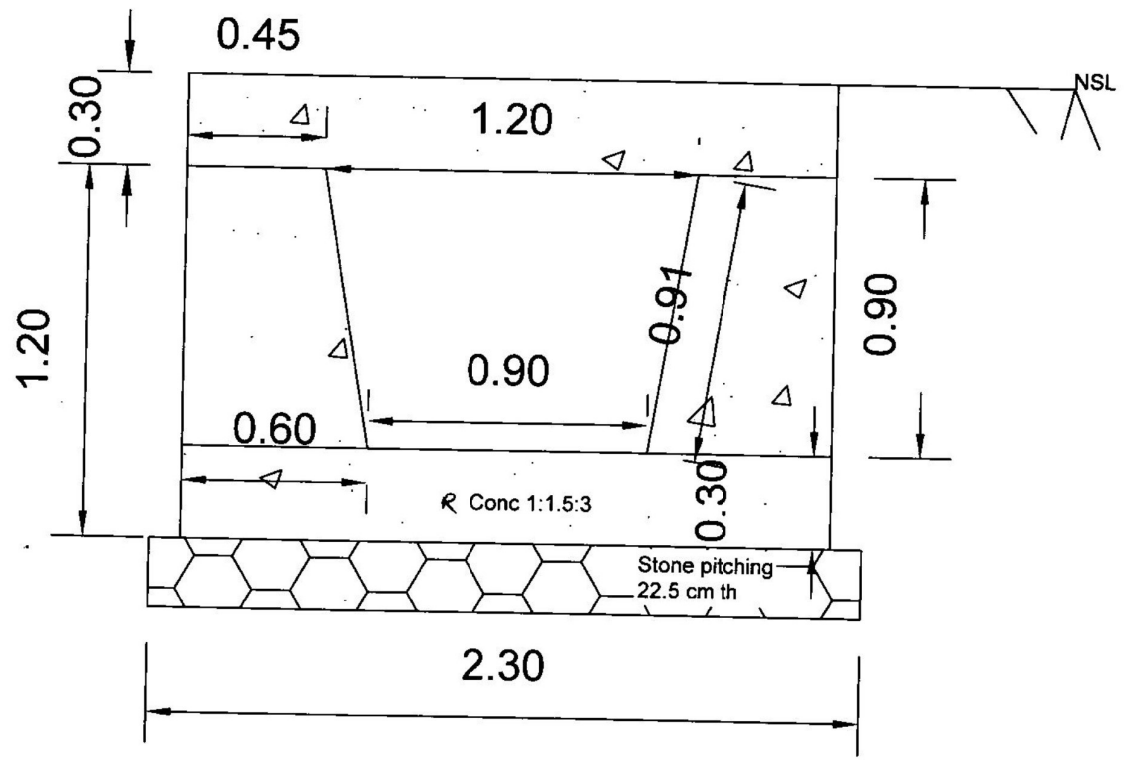

Proposed Nallah protection,RD 0 .0 to 7.0 m

Repair of damaged at TRT area during monsoon 2025 at Salal Power Station.

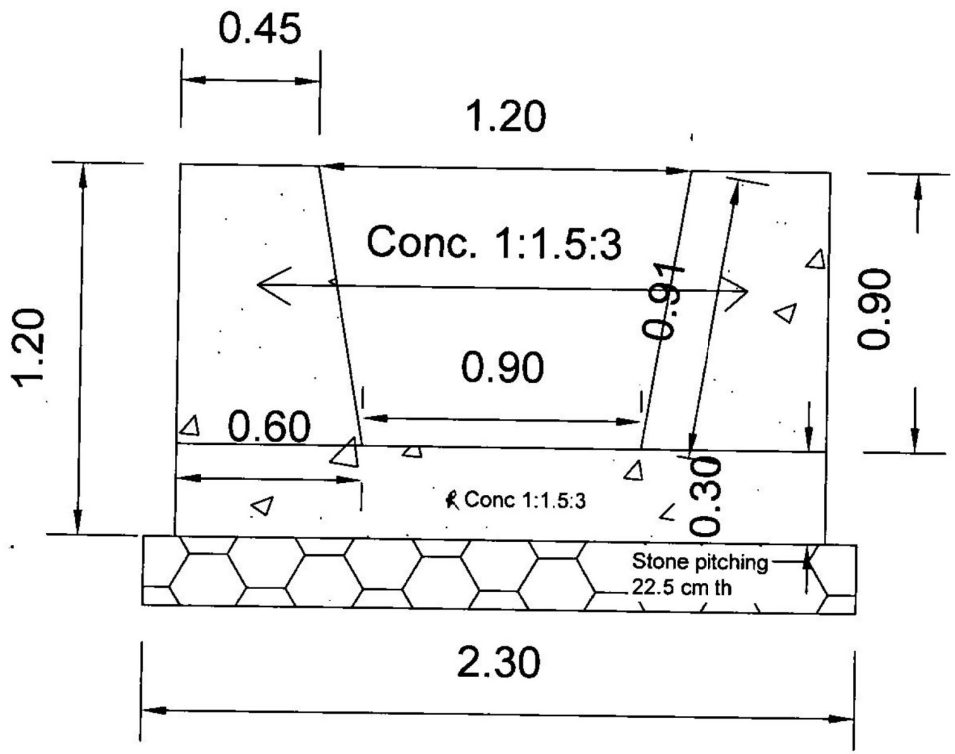

Proposed Nallah protection,RD 7.0 to 50.0

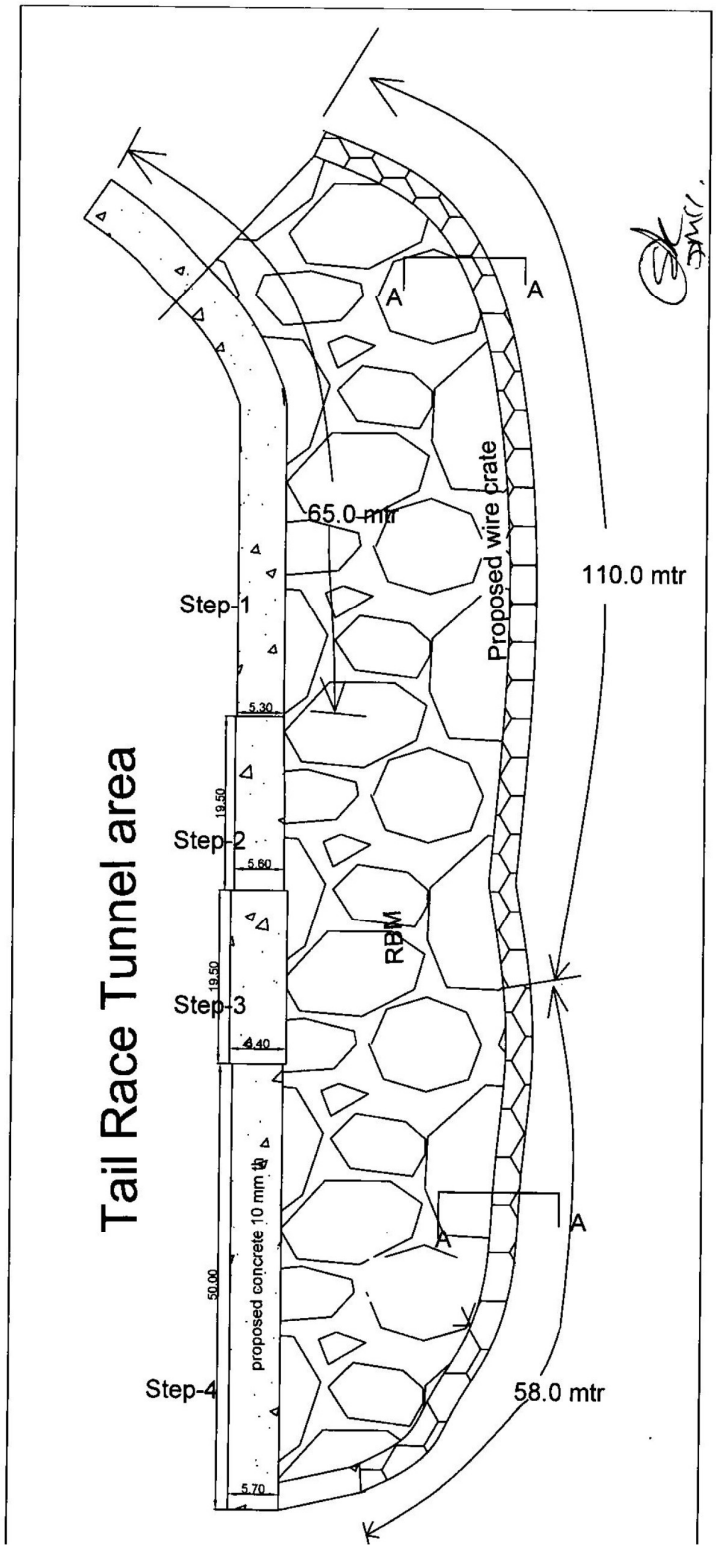
Tail Race Tunnel area
Step-1
Step-2
Step-3
Step-4
5.30
19.50
5.60
19.50
4.40
50.00
5.70
proposed concrete 10 mm th
65.0 mtr
110.0 mtr
58.0 mtr
Proposed wire crate
RBM
A
A
A
A

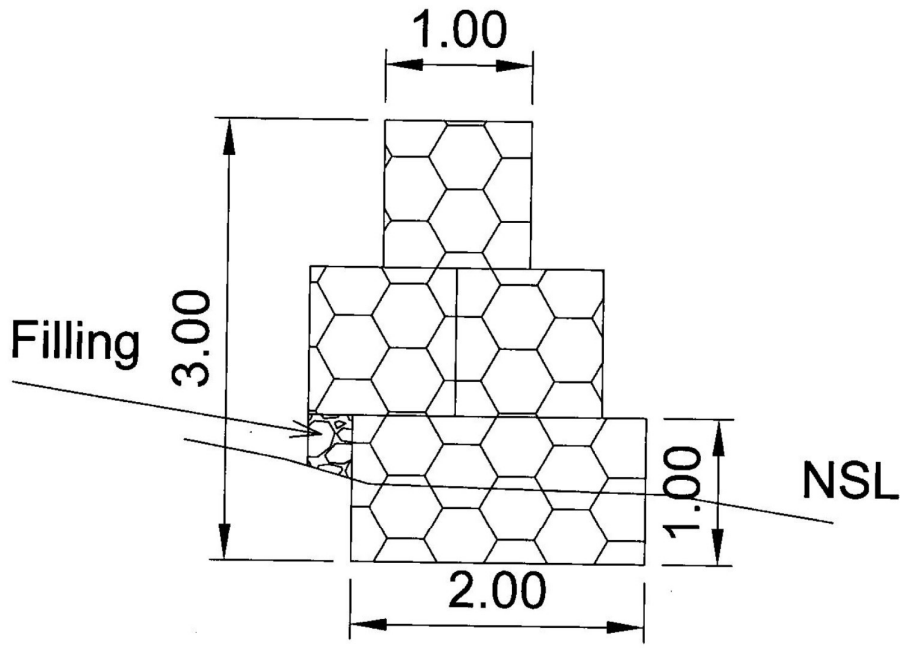

X-Section at AA

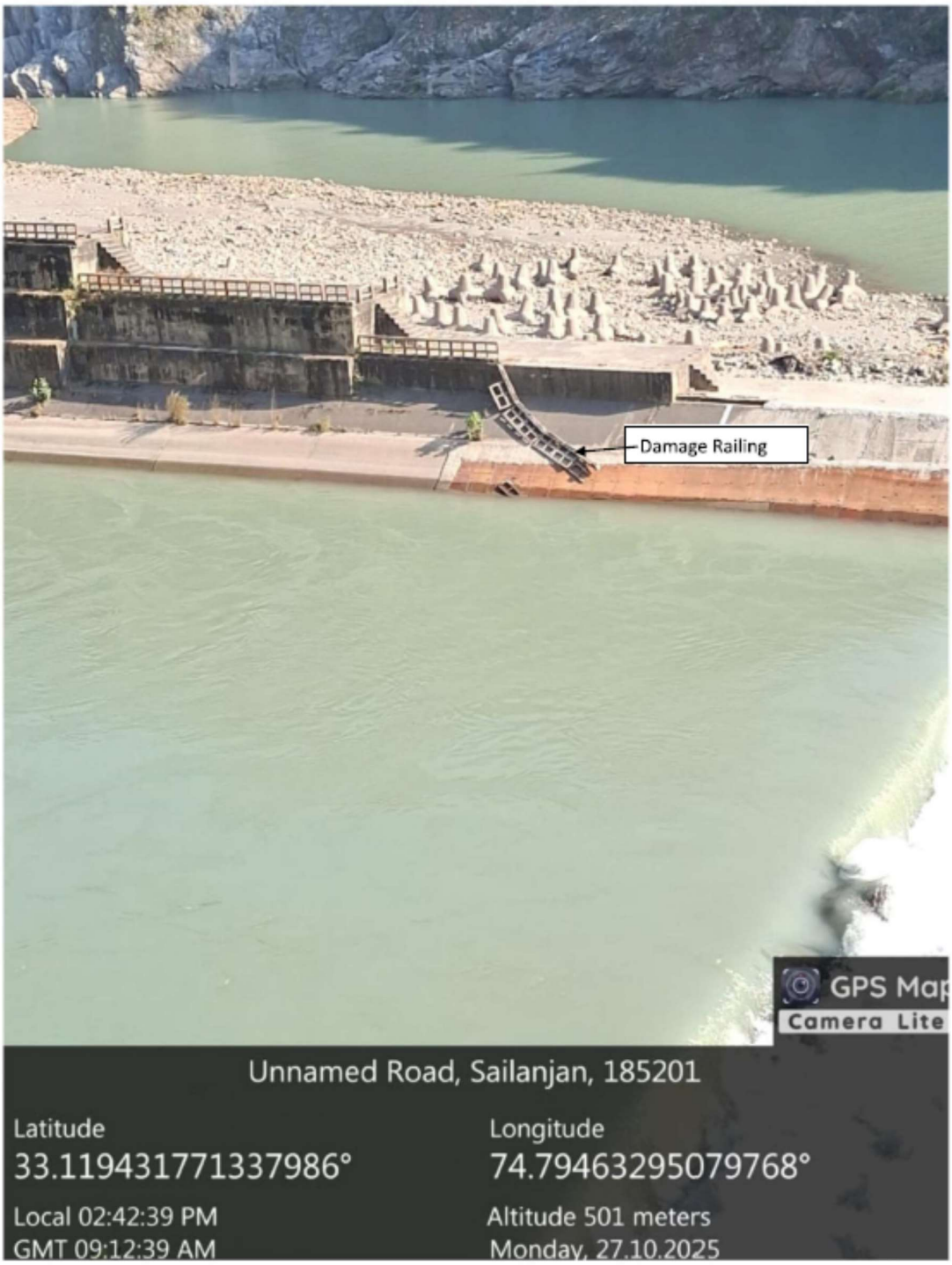
Damage Railing
GPS Map
Camera Lite
Unnamed Road, Sailanjan, 185201
Latitude
33.119431771337986°
Longitude
74.79463295079768°
Local 02:42:39 PM
GMT 09:12:39 AM
Altitude 501 meters
Monday, 27.10.2025

3

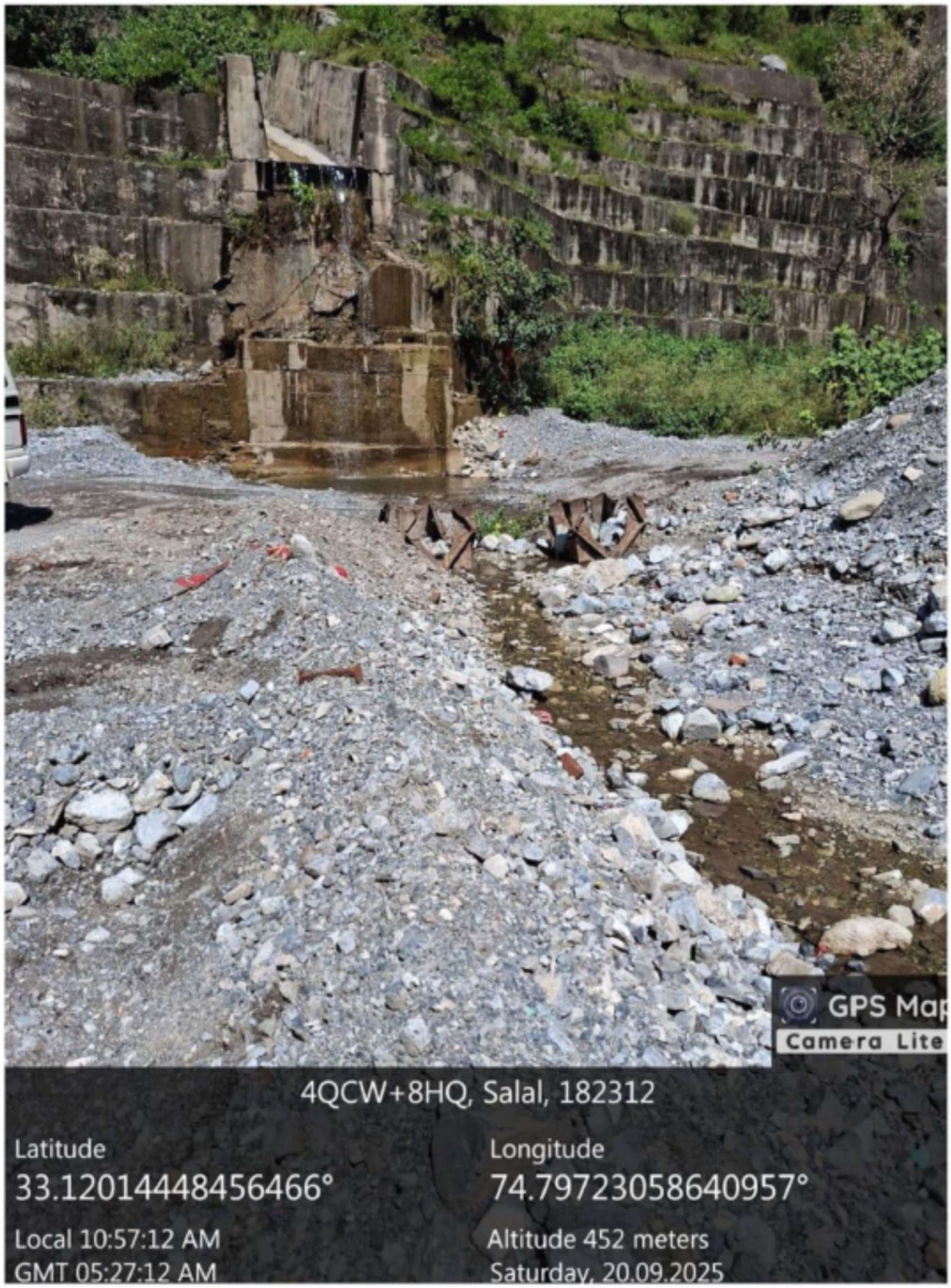
GPS Map
Camera Lite
4QCW+8HQ, Salal, 182312
Latitude
33.12014448456466°
Longitude
74.79723058640957°
Local 10:57:12 AM
GMT 05:27:12 AM
Altitude 452 meters
Saturday, 20.09.2025

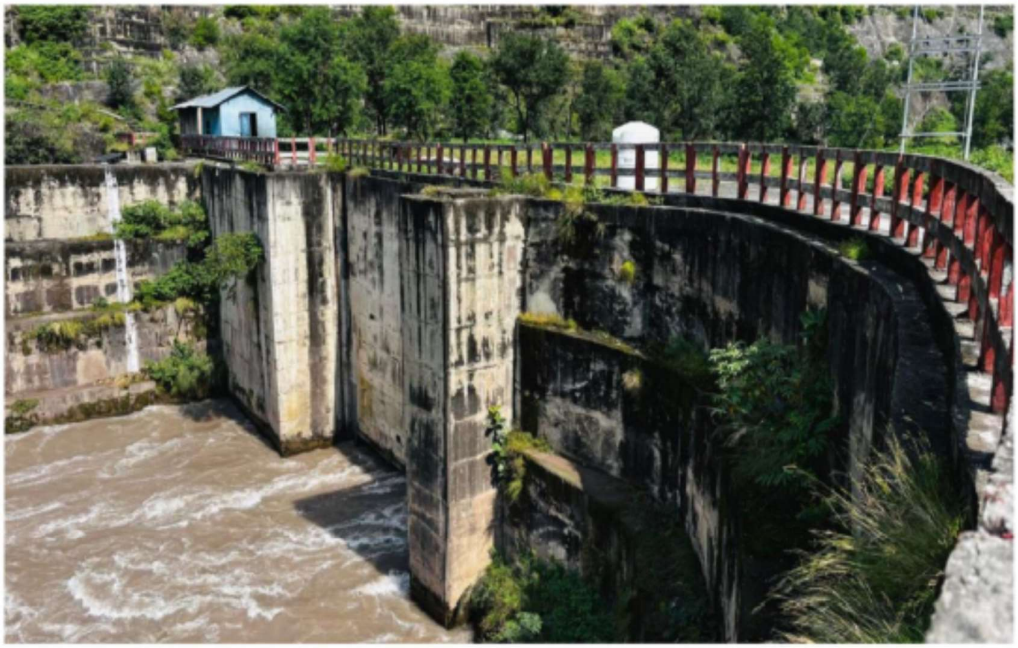
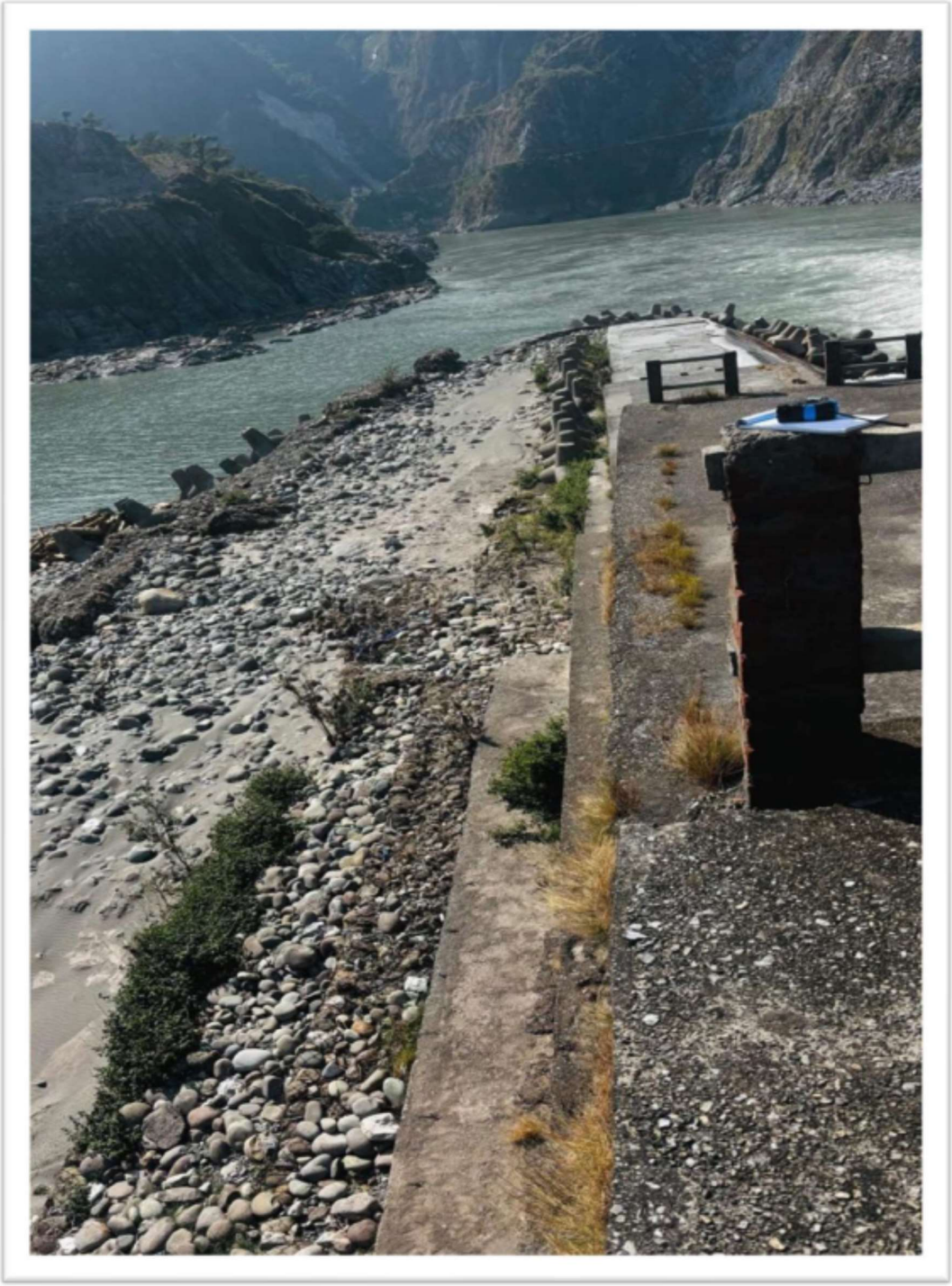
Damage Wire Crate